RESTRICTED

Change Inserted

OP 1212

Change 1, 2

Serial -1

PROJECTILE FUZES



A BUREAU OF ORDNANCE PUBLICATION

23 MAY 1945

PROJECTILE FUZES

23 MAY 1945

This publication is RESTRICTED and shall be safeguarded in accordance with the Security provisions of U. S. Navy Regulations, 1920, Article 76.

NAVY DEPARTMENT
BUREAU OF ORDNANCE
WASHINGTON 25, D. C.

23 May 1945

RESTRICTED

ORDNANCE PAMPHLET 1212

PROJECTILE FUZES

1. Ordnance Pamphlet 1212 describes all projectile fuzes (except VT fuzes), their operation, and performance characteristics, and contains pertinent information on their usage.

2. It is important that a full and complete report be made of malfunctioning or difficulties encountered with any fuze. The report which should be forwarded to the Bureau of Ordnance, should contain a detailed identification of the fuze, including the lot and mod number, and should also contain information concerning conditions, history, and description of the trouble.

3. This pamphlet supersedes Ordnance Circular Letters A64-44 dated 21 September 1944, A22-44 dated 31 March 1944, and A91-43 dated 2 September 1943.

4. This publication is RESTRICTED and shall be safeguarded in accordance with the security provisions of U. S. Navy Regulations, 1920, Article 76.

G. F. Hussey, Jr.
Rear Admiral, U. S. Navy
Chief of the Bureau of Ordnance

CONTENTS

Chapter		Page
1.	Introduction	5
	Safety Precautions	12
2.	Point Detonating Fuze Mk 12 Mods 2 and 3	15
3.	Auxiliary Detonating Fuze Mk 17 Mods 0-7	17
4.	Mechanical Time Fuze Mk 18 Mods 2, 3, and 4	19
5.	Base Detonating Fuze Mk 19	25
6.	Base Detonating Fuze Mk 20	29
7.	Base Detonating Fuze Mk 21	33
8.	Mechanical Time Fuze Mk 22 Mods 4, 5, and 6	37
9.	Base Detonating Fuze Mk 23	43
10.	Mechanical Time Fuze Mk 25 Mod 1	47
11.	Nose Detonating Fuze Mk 26	51
12.	Point Detonating Fuze Mk 27	55
13.	Base Detonating Fuze Mk 28	59
14.	Point Detonating Fuze Mk 29	63
15.	Point Detonating Fuze Mk 30	67
16.	Base Detonating Fuze Mk 31	71
17.	Point Detonating Fuze Mk 34	75
18.	Auxiliary Detonating Fuze Mk 35	77
19.	Base Detonating Fuze Mk 36	80
20.	Base Detonating Fuze Mk 39	83
21.	Mechanical Time Fuze Mk 42	87
22.	Auxiliary Detonating Fuze Mk 43	91
23.	Auxiliary Detonating Fuze Mk 44	95
24.	Auxiliary Detonating Fuze Mk 46	97
25.	Base Detonating Fuze Mk 48	101
26.	Mechanical Time Fuze Mk 50	104
27.	Mechanical Time Fuze Mk 51	107
28.	Auxiliary Detonating Fuze Mk 52	111
29.	Auxiliary Detonating Fuze Mk 54	113
30.	Auxiliary Detonating Fuze Mk 55	117
31.	Mechanical Time Fuze Mk 61 Mod 0	121
32.	Mechanical Time Fuze Mk 62 Mod 0	125
33.	Base Detonating Fuze M66A1	127

Chapter 1

INTRODUCTION

Purpose

The purpose of this OP is to acquaint officers and men with the projectile fuzes of restricted classification now in general use, including their operation, performance characteristics, projectiles with which each is used, to explain the various forces encountered which affect fuze design, and to list basic fuze design requirements. VT fuzes are not included in this OP but are discussed in a confidential pamphlet, OP 1480 (Preliminary).

Definition

A projectile fuze is an explosive loaded device designed to detonate or ignite the explosive filler of its projectile with a high order detonation (or ignition) at the desired time or under the circumstances desired. There are three general classes of fuzes, depending on their location in the projectile, as follows:

Nose Fuzes
Base Fuzes
Auxiliary Detonating Fuzes

These are further subdivided as to type in the following paragraphs.

Nose Fuzes

Point Detonating Fuzes. Point detonating fuzes are designed to function on impact with the target. The fuze functions by detonating or igniting the burster charge of the projectile; or by igniting an incorporated auxiliary booster which detonates the burster charge.

Time Fuzes. Time fuzes are designed to burst the projectile at some predetermined time after the projectile leaves the gun. These fuzes contain a gear train and escapement mechanism which starts to run immediately after the inertia force of setback has ceased. After a predetermined and pre-set time interval, a firing pin fires a primer cap. The source of energy to drive the mechanism may be either coiled springs or centrifugal force acting upon driving weights.

Base Fuzes

Base Detonating Non-Delay Fuzes. Inertia plunger type impact fuzes which contain no actual delay element, but which do have a slight inherent mechanical delay.

Auxiliary Detonating Fuzes are always used in conjunction with nose fuzes for naval projectiles of 3-in. and larger caliber, with the exception of illuminating, WP, and certain chemical projectiles. They are interposed between the nose fuze and the bursting charge of the projectile and also act as a safety feature which prevents the projectile filler from detonating in case the nose fuze is actuated accidentally or at any time before the auxiliary detonating fuze is fully armed. In high capacity projectiles it is standard practice to substitute a steel nose plug for the nose fuze when greater penetration is desired, thereby relying largely on base fuze action. This takes advantage of the slight inherent mechanical delay of the non-delay base fuze if this type is installed. The auxiliary detonating fuze shall not be removed in this case.

Ignition and Detonating Fuzes

There are two different types of fuzes depending upon the method in which the burster charge is fired.

Ignition Fuzes. The operating mechanism of the ignition type fuzes acts to fire a black-powder magazine which may ignite the bursting charge of the projectile directly or function through an auxiliary detonating fuze, containing a detonating element. Examples of this type of fuze are found in the Fuzes Mks 18, 22, 25, etc.

Detonating Fuzes. A detonating fuze contains a high explosive detonating charge directly within its own body. Explosion of the projectile burster charge results directly from detonating fuze action. Examples of these fuzes are found in Fuzes Mks 19, 21, 28, etc.

Forces Used in Fuze Design

When a projectile is fired from a gun, several forces are brought into play which must be considered in fuze design. These are:

(a) Setback. The brief inertia force resulting from the acceleration of the projectile in the bore of the gun which tends to move all fuze parts toward the base.

(b) Angular Setback. For parts such as setting rings of time fuzes, the angular setback or inertia force created by the angular acceleration of the projectile in the bore is of primary importance. The weight of such parts must be determined so that the ratio of angular acceleration and setback will prevent slippage of the parts; otherwise, slippage might result in changing the time setting of the fuze.

(c) Centrifugal Force. The continuous force created by the rotation of the projectile which tends to move parts radially from the longitudinal axis of the projectile. This rotation is not constant but is a maximum just outside the bore and gradually decreases as the projectile travels along its trajectory. However, even at extreme ranges the rate of rotation is relatively high in comparison with the linear velocity of the projectile.

(d) Creep. The continuous inertia force resulting from the deceleration of the projectile caused by air resistance, which tends to move fuze parts not directly exposed to air resistance toward the nose of the projectile. This force is not constant but is a function of the velocity of the projectile and the density of the air reaching a maximum value just outside the bore and decreasing gradually as the projectile travels along its trajectory.

(e) Impact. The sudden inertia force which tends to make all movable parts in a base fuze move forward when the projectile strikes an object, or the shocking force from impact causing backward movement of a movable striker or striker extension in a nose or point detonating fuze.

(f) Friction. Fuze parts which are designed to have other than radial movement, i. e., axial movement (plunger) and rotation about the longitudinal axis (rotors), are subject to high frictional forces which act to restrain motion. The high frictional forces are in part the result of centrifugal forces acting on the parts, created by eccentricities of the axis of spin with the axis of the projectile or by virtue of their position relative to the axis of the projectile. Frictional forces acting on fuze parts also result when the force of setback commences.

(g) Forces Resulting from Yaw and Nutation of the Projectiles. These forces resulting from the unsteady flight of the projectile act only during the first part of the trajectory and are practically negligible thereafter. The unsteady flight gives rise to gyroscopic forces and also results in increasing creep over and above that which would be measured with steady flight. For most design purposes these forces are usually neglected—the measured creep force includes that added by the unsteady flight.

(h) Forces Due to Run-up in Worn Gun. In a worn gun, bore enlargement at the origin will prevent the projectile being seated when fired, thereby causing a certain amount of "run-up" before the projectile engages the rifling of the bore. Propellent gases cause the projectile to hit the lands of the rifling with considerable force, subjecting fuze parts to severe shock and strain. In the case of some nose fuzes, the force has been great enough to break the ogive from the fuze body and spill the detonator, with subsequent firing. A broken ogive may also cause firing of certain base fuzes through excessive deceleration at the muzzle. This factor in fuze design is under present study and experimentation.

(i) Pressure of Propellent Charge Gases. While a projectile is traveling down the bore of a gun, its base, and hence the exposed part of a base fuze, is acted upon by hot gases at very high pressure. This pressure may be utilized to actuate parts of the fuze in various manners. Actually, this force is not employed in any U. S. Naval fuzes but is used in some British base fuze designs, notably for a selective delay or non-delay feature.

In addition to these natural forces the fuze designer makes use of springs, clock mechanisms (either spring driven or actuated by centrifugal force), and the burning of powder trains. The latter device was formerly used in all anti-aircraft time fuzes, but these are now obsolete. (Except for U. S. Army fuzes.)

In order to give an idea of the magnitude of some of these forces which a fuze designer must consider, the following table is offered:

Caliber	Muzzle Velocity f/s	Max. Bore Pressure in New Guns	Maximum Setback Force**	Spin at Muzzle r.p.s.	Maximum Retardation in Flight* (Creep Force)
20-mm	2725	24 long tons/in^2	96,566 g	1154	...
1.1"	2700	18 "	41,771 g	982	...
40-mm	2890	19.5 "	43, 215 g	734	...
3"/50	2700	17 "	20,627 g	338	11.4 g
4"/50	2900	17 "	14,505 g	272	7.1 g
5"/25 AAC	2175	17 "	13, 881 g	209	6.0 g
5"/38 AAC	2600	18 "	14, 344 g	208	7.2 g
5"/51 HC	3150	17 "	14,950 g	216	...
6"/47 AP	2500	18.5 "	9,012 g	200	3.5 g
8"/55 HC	2800	18 "	7,796 g	168	3.5 g
12"/50 HC	2620	17.5 "	4,717 g	105	2.0 g
14"/45 AP	2600	18 "	4,137 g	89	1.8 g
14"/50 HC	2830	18 "	4,867 g	96	2.4 g
16"/45 HC	2525	18 "	4,268 g	75	1.7 g
16"/50 HC	2690	18 "	4,268 g	81	1.7 g
16"/50 AP	2500	18 "	3,003 g	75	1.1 g

* The maximum retardation in flight occurs at the first instant the projectile is piercing still air; that is, at the instant the blast of propellent gases striking the base of the projectile has died down to zero value. This represents a distance from the muzzle varying appreciably with the caliber of the gun and probably runs from about 1½ ft. for 20-mm up to perhaps 30 ft. for 16-in. Before the projectile reaches this point, the fuze is fully armed.

** The unit "g" refers to gravity. That is, if a certain fuze part in a 20-mm projectile weighs one gram it is acted upon in the bore of the gun by a maximum acceleration force of 96,566 grams when the round is fired.

Explosives Used in Fuzes

Explosive materials used in fuzes must meet several basic requirements as follows:

(a) They must not be so sensitive that they are automatically initiated by the shock of firing or of impact. An exception to this is the 20-mm Fuze Mk 26 Mod 1, which contains a detonator designed to function by shock, or crushing action on impact.

(b) They must be compatible with other explosives, metals, or materials with which they are in contact. That is, such contact after long storage must not result in the chemical formation of supersensitive compounds or cause the original explosives to become desensitized. The explosives must resist deterioration due to age, moisture, and ammoniacal fumes.

(c) The explosive train in most fuzes consists of a primer cap, a detonator, and a booster in that sequence. The primer cap is acted upon first by a firing pin and hence, in itself, is the very heart of the fuze. This primer cap either sets off a detonator directly in the case of non-delay base fuzes, or a delay element in the case of delay base fuzes, which in turn sets off the detonator. To transmit the explosive shock wave from the detonator to the booster, since they are mounted in separate fuze parts, so called "lead-ins" and "lead-outs," consisting of explosive loaded channels are provided.

There is a type of detonator which does not need a primer cap to set it off but which is initiated directly by a stab-type firing pin which pierces the end of the detonator itself. This is commonly known as a primer detonator. This type is used in the Point

Detonating Fuzes Mks 27, 29, 30, 34, and the Auxiliary Detonating Fuzes Mks 43, 54 and 55. In the stab-type detonator a sensitive lead azide mixture is loaded into the end which the firing pin pierces. This mixture consists of lead azide, potassium chlorate, antimony sulfide, and carborundum crystals. Whenever such a pressed mixture is pierced by a sharp instrument, local heating or friction conditions are created in the tiny crystals which result in initiation of a flash and shock wave.

Typical explosive materials used (or formerly used) in the explosive train of the various components mentioned above are as follows:

Primer Cap Mixtures	Fuzes Used in
Mercury fulminate, potassium chlorate, and antimony sulfide	Base detonating fuzes. Formerly used in auxiliary detonating fuzes
Lead azide, potassium chlorate, antimony sulfide and carborundum	Nose and point detonating fuzes, and auxiliary detonating fuzes
Lead sulfocyanate, TNT, antimony sulfide and potassium chlorate	Mechanical time fuzes
Delay Elements	
Black powder	Base detonating fuzes
Detonators	
Lead azide, tetryl*, mercury fulminate**	Base detonating fuzes, point detonating, and auxiliary detonating fuzes
Lead-outs and Lead-ins	
Tetryl	Nose, point detonating, auxiliary detonating, and base detonating fuzes
Boosters	
Tetryl	Nose, point detonating, auxiliary detonating, and base detonating fuzes.

* Tetryl is included in some detonators only to increase the brisance and is never used alone in a detonator. Detonators containing tetryl are known as "compound detonators".

** Mercury Fulminate was formerly used in nose detonating and auxiliary detonating fuzes. The modern fuzes employ lead azide.

The functioning of the explosive train depends on transmitting the detonation from more sensitive to the less sensitive explosives. With regard to the sensitivity to impact of the substances listed above, mercury fulminate [$Hg(OCN)_2$] is the most sensitive. Pressed lead azide (PbN_6) is about half as sensitive as fulminate; pressed tetryl $C_6H_2(NO_2)_3(NCH_3NO_2)$ is about $\frac{1}{7}$ as sensitive; and the filler of most projectiles, explosive D [ammonium picrate —$(C_6H_2(ONH_4)(NO_2)_3]$ is less than $\frac{1}{10}$ as sensitive.

Safety Features

Since the fuze is the element of every live-loaded projectile which causes it to explode, the fuze must contain adequate safety features or serious accidents would occur during transportation of projectiles, loading ammunition on board ships, loading projectiles into guns, or particularly while the projectile is subjected to the sudden and violent forces of being fired from the gun. One cardinal requirement of Navy fuzes is that they be "detonator safe." That is, should the detonator be set off for any reason, while the fuze is in the unarmed condition, the booster of the fuze and hence the projectile filler must not be detonated. This is accomplished by having the explosive train mechanically separated between the detonator and the booster. There are two exceptions to this requirement: the Point Detonating Fuze Mk 26 for 20-mm and the Base Detonating Fuze M66A1 for 3-in. AP projectiles. In each of these the detonator is permanently in line with the booster. This condition was accepted in the case of the Fuze Mk 26 because of the relatively small amount of explosive filler in a 20-mm projectile and hence the relatively small danger to personnel in case of a premature, and because the detonator contains straight azide and tetryl but not supersensitive azide priming mixture. In view of the vast quantities of this ammunition manufactured, the necessary rate of production can be maintained with this simple design; and also the cost is kept down. The Fuze M66A1 is an Army fuze temporarily accepted until a Navy-designed detonator-safe fuze can be put into production. The Army fuze passes all required safety tests, but, nonetheless, will ultimately be replaced by a Navy fuze which will be inherently safer.

In general, Navy fuzes have at least two independent safety features to prevent prematures before firing, while in the bore, or during flight. Thus, both features must fail simultaneously in order to cause a premature. Since the probability of either one failing is very small, the probability of both failing at the same time is extremely remote: namely, the product of the independent probabilities. In most fuzes these safety features are in the form of "detents" which require spinning the projectile at a high rate to be withdrawn so that the fuze can fire on impact or retardation. These detents are mechanical stops held under spring pressure which hold or block a plunger, rotor, or other movable part in a safe position until they are withdrawn by the centrifugal force of the projectile's spin acting on the mass of the detent itself. These detents are held in the locking position by small compressed detent springs which have to be overcome before the detent can be withdrawn. Usually these are in pairs so that, if a projectile is dropped on one side in an attitude which could, and often does, withdraw one detent momentarily, the detent opposite this one is forced all the more firmly into the locking position by the force of the same blow. Thus centrifugal force of a high value, which could not normally be attained by any other process than firing the projectile, is required to withdraw all detents simultaneously leaving the previously restrained rotor or plunger free to move into the firing position. Such detents are used not only to restrain rotors and plungers but also to act as barriers between a firing pin and a sensitive primer, as in the Mk 28 type base fuze, until the projectile is fired.

Test of Safety Features

To make sure that the safety features described above are effective, sample fuzes from production lots are subjected to the following safety tests before the lots are accepted:

1. Drop Test. Loaded fuzes in appropriate inert loaded projectiles are dropped from a height of 40 feet onto armor plate, on the nose, on the side, and base down. The fuzes are then examined for functioning or derangement such that they are in a dangerous condition. The 40 ft. height was arbitrarily chosen to represent the greatest probable distance a projectile might be dropped down a hatch or onto an ammunition barge from a crane in actual service. Dropping test fuzes onto armor plate makes the test really more severe and hence augments the factor of safety.

655586—45——2

2. Jolt Test. Sample loaded fuzes are mounted in a fixture in a special machine and subjected to 1750 drops in each of various positions from a 4-in. height onto a leather covered anvil. They are then examined for functioning or to see if there is any derangement making them dangerous.

3. Jumble Test. Sample loaded fuzes are placed in a closed rectangular wooden molded or sheet-rubber lined box mounted in a machine which revolves the box about one of its long diagonals at 30 rpm for a total of 3600 revolutions. The fuzes are then examined as they are after the jolt test. The jolt and jumble tests are an exaggerated simulation of rough treatment during shipment and handling.

4. Bore Safety. Before a fuze design is placed into production it must be demonstrated that it is "bore safe." That is, that in case the projectile hits an object lodged in the bore, or any type of constriction, the fuze will not be armed and hence will not cause a bore detonation. Routine firing, without occurrence of a bore detonation, is usually considered sufficient proof of bore safety.

However, for experimental purposes a special test may be conducted. This test is carried out by deliberately placing a metal rod, or any other object of sufficient mass to cause detonation if the fuze is armed, at various positions in and just outside of the bore. In general, fuzes do not become armed until they are a few feet outside the muzzle. At this point the projectile has ceased to accelerate due to cessation of pressure from the propellent gases and is about to start decelerating due to air resistance. It can be visualized that at this point side-wall friction of detents and rotors is at a minimum because there is no longer any setback force and they respond to centrifugal force immediately. As was explained previously, there are two current exceptions to this bore safety requirement—the Point Detonating Fuze Mk 26 for 20-mm and the Base Detonating Fuze M66A1 for 3-in. AP projectiles.

Acceptance Tests of Production Lots of Fuzes

In addition to the safety tests described above, the following additional tests are conducted on sample fuzes chosen at random from production lots before the lots are accepted.

Functioning Test

In general, these tests are conducted by the firing of loaded projectiles at various velocities and obliquities against various targets. An exception to this is the Mechanical Time Fuze; functioning tests being conducted by varying the time settings. Obliquity is defined herein as the angle between the normal to the face of the plate and the axis of the projectile at the point of impact.

(a) Base Detonating Fuzes. Fuzed projectiles are fired against steel plate. Depending on the fuze some impacts are against heavy plate, as in the case of the Fuze Mk 21 for AP projectiles. Sensitivity tests are also conducted against light plate. The requirements are high order detonations at the proper distance behind the plate depending on the delay element in the particular fuze.

(b) Point and Nose Detonating Fuzes. Functioning tests on various targets such as $\frac{3}{16}$-in. thick binders board or cardboard, $\frac{1}{8}$-in. Mild Steel, soft pine, ground and water, are conducted. Requirements are high order detonations on impact.

(c) Mechanical Time Fuzes. Functioning tests at various time settings are conducted to ascertain that the reliability and timing accuracy are within specified limits.

(d) Auxiliary Detonating Fuzes. The details of the acceptance tests of each fuze are stated in the individual fuze descriptions. These are tested in conjunction with mechanical time or point detonating fuzes of established reliability. If the projectile bursts high order, it is evident that the auxiliary detonator was satisfactory.

Flight Tests

Sample fuzes are fired at long-range using proof pressures in guns of all degrees of wear in an effort to reveal any tendency to cause prematures.

Fuze Protection

The primary cause of fuze deterioration with resultant duds is moisture. Moisture causes deterioration and desensitization of explosive components, notably primer cap mixtures. In addition, moisture adversely affects mechanical parts by corroding de-

tents, springs, and other vulnerable parts so that the fuze does not arm. Full use is made of various plating methods to reduce corrosion but this is not enough. The deterioration of fuzes, particularly base fuzes and auxiliary detonating fuzes, also becomes accelerated as soon as they are assembled into loaded projectiles in contact with the explosive filler.

Since mechanical time fuzes contain many delicate moving parts and have several joints and openings vulnerable to entrance of moisture repeated efforts have been made to seal these fuzes externally. Flexible plastic fuze covers cemented over the whole fuze were tried, but were discarded as impractical. A moisture-proofing compound adopted from the British, known as R.D. 1154 and resembling thin putty, was applied by depots to the fuzes of assembled rounds. This compound was intended to keep out moisture and at the same time be fluid enough so that once a fuze was set but not fired it could be quickly and easily molded with fingers back into an unbroken coating. It was found that after a relatively short storage period the oil base of this compound penetrated into the inner bearing surfaces of the fuzes reducing the coefficient of friction causing the setting ring of the 3-in. Time Fuze Mk 22 to slip in the bore upon firing so that erratic timing resulted. Often the slippage caused the fuze to be turned back into the safe zone, giving the effect of producing duds. When this became known, further use of this R.D. 1154 compound on all fuzes was discontinued, and arrangements made to rework all contaminated fuzes.

Since both methods described above were unsuccessful the Naval Ordnance Laboratory experimented with many coating materials and finally ascertained that a clear bakelite varnish (OS 1433) applied to the outside surface at the joint between upper and lower cap of the fuze forms a tough, impermeable coating which effectively protects the fuze from ingress of moisture. Since this coating would also seal in any moisture in the air entrapped in the fuze during assembly, which is undesirable, a small desiccator unit containing silica gel is installed in each fuze to absorb this moisture from the imprisoned air.

Mechanical time fuzes, which are treated with the bakelite varnish, contain the desiccator unit, and have special sealing gaskets between setting (slip joint) surfaces and an improved base closing plug, have been assigned new mark numbers as follows:

Mk 50—45 second Fuze for 5-in. (Moisture-proofed Mk 18)
Mk 51—30 second Fuze for 3-in. and 4-in. (Moisture-proofed Mk 22)

In addition to these protective measures applied to nose fuzes themselves, metal waterproof protecting caps are screwed over the nose of the projectile using a heavy grease on the threads to keep out moisture. These afford mechanical protection to the nose fuzes up until the time the caps must be removed prior to firing of the ammunition.

The base fuzes are also susceptible to deterioration due to moisture. Accordingly, a method of applying the same bakelite varnish to the outside surface of base fuzes by the loading plants was worked out. Again it was necessary to insert a small desiccator unit inside the fuze to keep the entrapped air dry. This unit is fitted into the forward end of the auxiliary plunger in fuzes of the Mk 28 type, which includes all currently produced base detonating fuzes.

In addition to the protective measures against moisture described above, all fuzes are packed by the fuze loading plants in hermetically sealed tin cans containing small cloth or gauze bags of silica gel to keep the air dry around the fuzes.

Basic Requirements of a Base Detonating Delay Fuze for Major Caliber AP Projectile

The following basic requirements have been established as the optimum for the design of future base detonating delay fuzes for major caliber AP projectiles:

(a) The fuze shall be bore safe and safe in flight when fired at proof pressure in all projectiles with which it is intended to be used.

(b) The fuze should be designed to be as sensitive as possible, consistent with safety. In the heaviest projectile in service (16-in.—2700 lbs. at this time), a 1-in. structural steel plate at 1500 foot-second striking velocity on a normal impact should be the lightest acceptable plate to initiate fuze action. Fuze action should also be initiated on water or ground impact under any probable condition.

(c) The fuze should, without suffering deformation or breakage which would prevent its functioning as designed, withstand impacts at any velocity

up to that obtained at proof pressure in the gun and obliquity combination prescribed for the acceptance of the projectiles with which it is intended to be used in service.

(d) The fuze should effectively detonate the projectile at a point between 30 and 70 feet beyond the first plate which might be expected to initiate fuze action.

(e) The fuze should be designed so that it is positively moisture-proof; and, if practicable, so that it can, without serious mutilation, be broken down for examination and replacement (if necessary) of explosive components. This latter requirement is desirable, but should not be considered essential at the expense of other requirements.

(f) The explosive components used and the methods of loading should be such that long storage of the fuze, either alone or assembled in loaded projectiles, shall not result in deterioration or the formation of more sensitive chemical compounds.

Assembly of Fuzes into Projectiles

Base Fuzes. These are screwed either directly into threads in the base (or base plugs) of the smaller projectiles (3-in. AP, 4-in. HC, 5-in. AA Common, 6-in. AP and Common, 8-in. all types) or into a fuze adapter which is itself screwed into the base plug of larger projectiles (12-in., 14-in., and 16-in., all types). A luting compound is spread on the threads of the fuze before insertion. This acts primarily as a gas check. After the base fuze is screwed home, a lead and copper gas check ring is placed around the base of the fuze and pressed firmly into position. This ring prevents the high pressure hot propellent gases in the bore of the gun from penetrating into the projectile through the fuze threads and setting off the explosive filler. Since the installation of this gas check ring requires special care and removal would expose the projectile's explosive charge, it is not feasible to remove or install base fuzes aboard ship, nor should any occasion normally arise to make it necessary.

Nose Fuzes. These are installed wrench tight in the adapter in the nose of the projectile which also holds the auxiliary detonating fuze. Luting compound is used on these threads also, except in HC projectiles where interchangeability of fuzes and plugs is necessary.

Auxiliary Detonating Fuzes. These are screwed into the bottom end of the adapter referred to above, using luting compound on the threads before the adapter is screwed into the projectile. Thus, this fuze cannot be removed without first removing the adapter. When a steel nose plug is used in place of a nose fuze the auxiliary detonator shall not be removed.

Fuze Performance at Ricochet Angles

Recent bombardment operations at short ranges, wherein ricochets frequently occurred without fuze action, made it advisable to conduct tests at the Naval Proving Ground to determine, if possible, minimum angles of fall on ground and water which consistently result in fuze action. These tests indicated the following angles of fall to be about the minimum:

Fuze Type	Water Impact	Ground Impact
Base Detonating (Mk 19, 20, 21, 28, 39, 48)	5°	2°
Point Detonating (Mk 29 and 30)	12°	8°

These angles are not reliable enough due to the variable condition of the water's surface or the ground, to be relied upon for tactical purposes in planning a bombardment.

Safety Precautions

Base Fuzes and Auxiliary Detonating Fuzes. No specific precautions are necessary since the fuzes are always received installed in projectiles for shipboard use. However, removal of these fuzes or disassembly of them by ship's force is not authorized.

Nose Fuzes. Mechanical time fuzes and point detonating fuzes in their exposed position are not immune from derangement if the projectiles are handled or loaded roughly so as to strike the fuzes on hard surfaces. However, dangerous conditions are not probable as a result of such treatment—rather, duds may be created. Exception to this is for Illuminating, W or WP, projectiles where no auxiliary detonator is assembled. Since high capacity ammunition is issued with steel nose plugs in place, which can be interchanged with point detonating fuzes or mechanical time fuzes issued separately, it

became necessary to promulgate explicit instructions as required by Article 972(18), U. S. Navy Regulations, which prohibits removal of fuzes from projectiles on board ship without such instructions from the Bureau of Ordnance. Accordingly, NavOrd OCL A16-44, dated 8 March 1944, was issued, which authorizes interchanging of nose fuzes in regular projectile handling spaces. This letter also contains a general prudential rule, which is dictated by common sense and the understanding that ammunition is, by its very nature, potentially destructive. It is repeated here for general guidance:

In any operation involving fuzing, unfuzing, assembly, disassembly, cleaning, painting, etc., of all types of munitions, the work shall be accomplished in the most suitable location, taking into account safe removal from other explosives and possible damage to vital installations, and shall involve exposing the smallest number of rounds practicable. Only those persons actually essential for the work shall be in the vicinity. The ideal situation would be that where work would be performed on only one round at a time, in a location on deck, remote from all magazines, from ready stowage, from other supplies or ammunition or explosives, and from vital installations.

With the advent of the 1200 f/s charge for use in the 5″/38 caliber gun it became necessary to promulgate explicit information concerning proper fuzes for use in 5″/38 AAC and WP Projectiles to be fired at 1200 f/s initial velocity. NavOrd OCL A8-45 dated 1 February 1945 was therefore issued which authorizes replacement aboard ship of the Mechanical Time Fuzes Mk 18 and Mods and Mk 50 and Mods in 5″/38 AAC and WP projectiles by the Mechanical Time Fuze Mk 61 Mod 0 which is designed to operate reliably at 1200 f/s initial velocity. Authority is also granted for the replacement of the Fuzes Mk 18 and Mods and Mk 50 and Mods in 5″/38 AAC projectiles by the Point Detonating Fuze Mk 29 Mods 2 or 3 when ground impacts are desired. Authority for replacing the Mechanical Time Fuze in WP projectiles by the Point Detonating Mod 3 only was also granted; however, the subject of refuzing 5″/38 WP projectiles is covered more thoroughly in NavOrd OCL A8-45, dated 1 February 1945. This circular letter covers special safety precautions to be taken when handling unfuzed WP projectiles aboard ship considered necessary due to the fact that the black powder expelling charge in the WP projectiles is exposed to the atmosphere when the nose fuze is removed. No Auxiliary Detonating Fuze is used in WP projectiles.

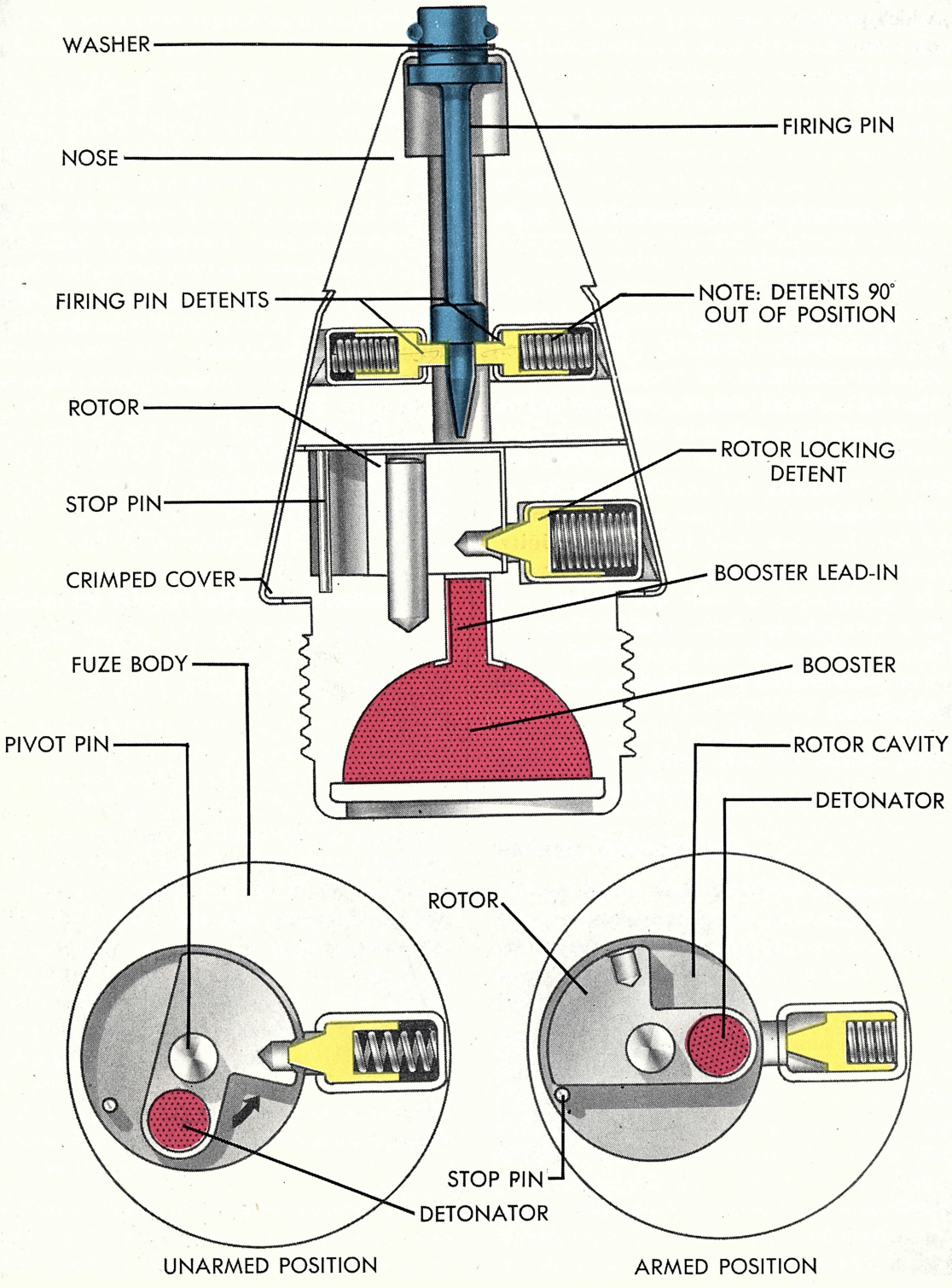

Figure 1.—Point Detonating Fuze Mk 12 Mods 2 and 3—Sectional View

Chapter 2

POINT DETONATING FUZE MARK 12 MODS 2 AND 3

General Data

Designation and Type

Point Detonating Fuze Mk 12 Mods 2 and 3

Projectile Used In

1.1-in. AA

Overall Dimensions and Weight

Length	2.125 in.
Body threads	.875 in.-20NS-3RH
Weight	0.188 lbs.

Material

Nose	aluminum
Base	brass

Applicable OS 1001

General Arrangement Drawing No.
(Mod 2)—181781

Explosives Used

Fulminate of mercury* in detonator, tetryl in booster of both Mods

* A relatively few lots of Fuzes Mk 12 Mod 3 were loaded with lead azide detonators by one loading plant.

Description

This fuze is a sensitive fuze designed to burst the projectile with high order detonation on impact with materials offering appreciable resistance to penetration such as the wings or fuselage of aircraft, etc. The principal parts of the fuze are the nose and base secured together by a jacket which is crimped over at both ends. A thin disc is interposed between the nose and base. The nose contains the assembly of the firing pin detents and firing pin. The forward part of the firing pin protrudes from the nose through a thin washer, and is "eared" by a special tool to prevent its moving back against the detonator until impact. This was found necessary to prevent occasional prematures in the bore or close outside. The base contains the assembly of the rotor, rotor detent, detonator and booster.

Operation

The fuze becomes armed by centrifugal force set up by rotation of the projectile. The firing pin detents are thrown outward clear of the firing pin and the rotor detent is thrown outward clear of the rotor. The rotor thus released rotates about the rotor pivot until stopped by the rotor stop. The rotation of the rotor brings the detonator in the rotor in line wih the firing pin and booster lead. When the projecting head of the firing pin comes in contact with any object having an appreciable resistance to impact the firing pin "ears" are sheared and the pin stabs the detonator, exploding it, which in turn detonates the booster and the burster charge of the projectile.

Arming Spin

The firing pin detents arm at from 5000 to 7000 rpm. The rotor detent and hence the rotor arms at from 10,000 to 12,000 rpm in static tests. The muzzle spin of the projectile is about 58,920 rpm.

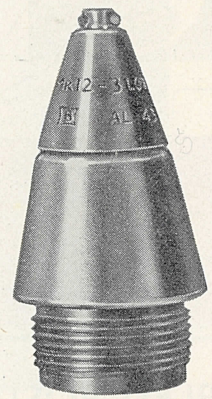

Figure 2.—Point Detonating Fuze Mk 12 Mods 2 and 3—Exterior View Full Size

Safety Features

Safety detent mechanism and rotor arm only by centrifugal force. Until fired from a gun, the detonator remains out of line with the firing pin. The acceleration and friction forces acting on the fuze while it is still in the barrel are such that the rotor does not actually snap into the armed position until just after it leaves the muzzle and the forward acceleration drops radically even though the projectile's spin while still in the barrel is far above that required to arm the fuze in a static fixture. This phenomenon thus acts as a bore safe feature.

Sensitivity Limits

These fuzes fired at service velocity will detonate consistently on $\frac{3}{16}$-in. beaverboard or 0.032-in. dural but usually fail on 0.025-in. dural.

Acceptance Functioning Tests

Ten fuzes from each lot are tested by firing at service velocity against either (a) 0.045-in. thick dural plate or (b) $\frac{3}{16}$-in. thick binder's board or cardboard. Under test (a) a minimum of 90% performance is required; under test (b) a minimum of 80% performance is required. Each fuze must cause a high order detonation of the projectile within four inches after contact with the plate or board. Failure of fuzes tested to meet percentages specified causes rejection of the lot.

Markings on Fuze

D.F. Mk 12-2 (or 3); Lot——
Manufacturer's initials; Inspector's initials;
Year and month of manufacture; Anchor stamp.

Remarks

The Fuze Mk 12 and Mods is no longer in production, having been superseded by the Point Detonating Fuze Mk 34 and Mods. The Fuze Mk 12 Mod 2 and Mod 3 differ only in the manufacturers of the inert parts. The Naval Gun Factory and the Pollack Manufacturing Company made parts for the Mod 2 and the Bohn Aluminum and Brass Corporation for the Mod 3. Fuzes of Mod 0 were never manufactured or issued. Fuzes of Mod 1 were manufactured by the Naval Gun Factory and were issued to vessels, but comparatively few were fired.

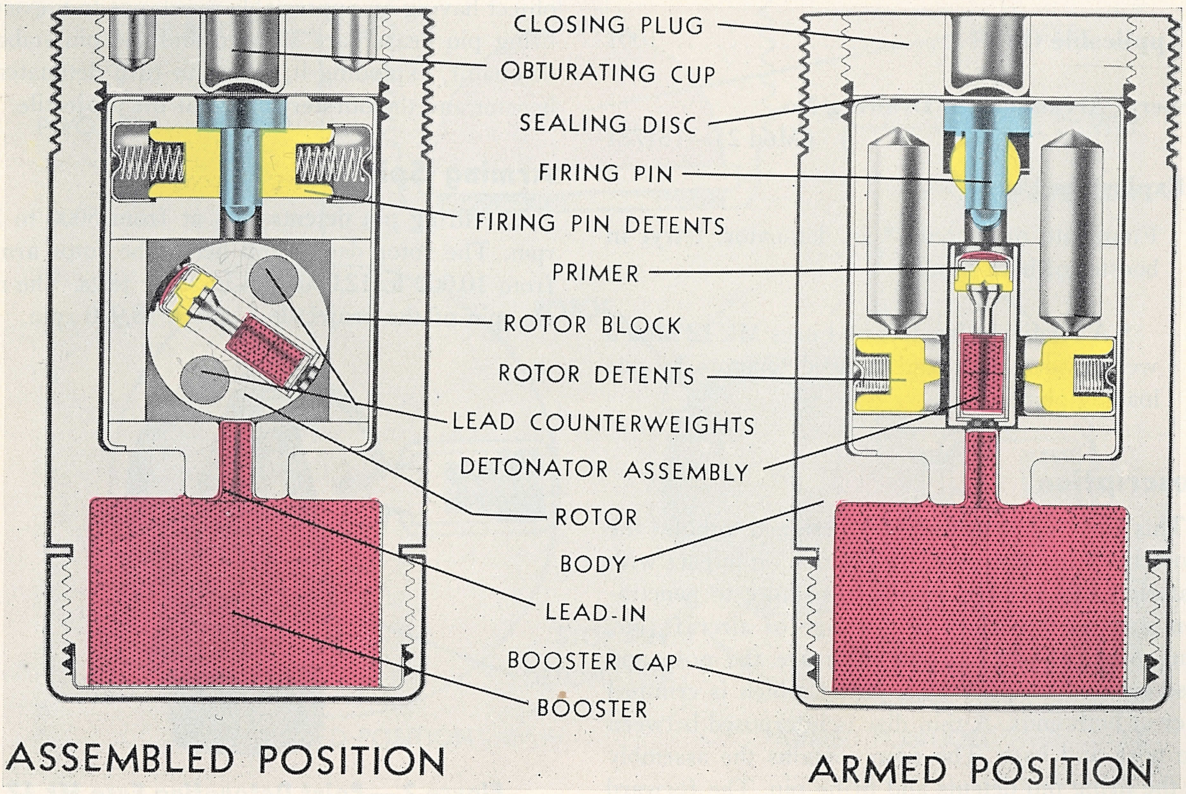

Figure 3.—Auxiliary Detonating Fuze Mk 17 Mod 0-7—Sectional View

Chapter 3

AUXILIARY DETONATING FUZE MARK 17 MODS 0-7

General Data

Designation and Type

Auxiliary Detonating Fuze Mk 17 Mods 0-7

Projectiles Formerly Used In

AA	AA Common	HC
3″/23 cal.	5″/25 cal.	4″/50 cal.
3″/50 cal.	5″/38 cal.	5″/51 cal.
		6″/53 cal.
		6″/47 cal. (Sp.)

Overall Dimensions and Weight

Length ..... 2.50 in.
Body threads 1⅜ in.-20NS-2LH
Weight ..... 0.78 lb.

Material

Body ..... Steel
Closing plug ..... Steel
Booster cap ..... Steel
Rotor block ..... Aluminum alloy
Rotor ..... Aluminum alloy
Firing pin holder ..... Brass
Base for rotor ..... Brass

Applicable OS 2104

General Arrangement Drawing No. 225390

Explosives Used

Primer cap —Fulminate of mercury cap mixture
Detonator —Fulminate of mercury and tetryl
Booster —Tetryl
Booster lead-in —Tetryl

Description

The fuze is composed of a one-piece body with a booster cap and plug closing the respective ends. The body assembly houses the booster firing pin assembly, the rotor block assembly and the base for rotor. In the middle of the closing plug is an obturating cup with a sealing disc between the plug and the firing pin housing. The fuze is designed:

(1) To detonate the projectile explosive charge and thereby burst the projectile with high order detonation instantaneously after the initiating explosive charge in the nose fuze is fired.

(2) To insure safety in transportation and stowage and to prevent detonation of the projectile in the gun should the initiating nose fuze function prematurely.

(3) Not to function or detonate when assembled in a projectile and then dropped nose, side or base down from a height of 40 feet onto armor plate.

Operation

The fuze is assembled in the unarmed position and remains in this condition during transportation and stowage and until the projectile in which it is assembled is fired from a gun. When the projectile is fired from a gun, centrifugal force moves the firing pin detents and rotor detents outward overcoming the holding forces and thereby releasing the firing pin and rotor.

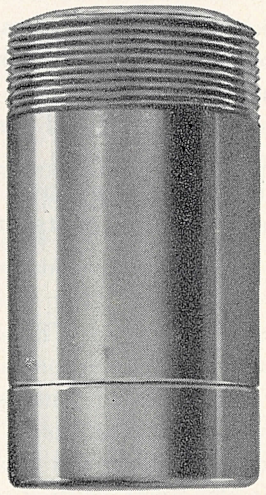

Figure 4.—Auxiliary Detonating Fuze Mk 17 Mod 0-7—Exterior View Full Size

655586—45——3

The rotor which contains two lead counterweights, the primer and detonator, is assembled in the rotor block with the axis of the detonator at an angle of 55 degrees from the long axis of the fuze. The rotor is held in this unarmed position by two rotor detents, the tapered ends of which engage in holes in the sides of the rotor. In this position the detonator element is safe and if the detonator were to be exploded it would not detonate the booster. The rotor detents, on being moved outward by centrifugal force, withdraw from the holes in the rotor, permitting the counterweights to rotate the rotor into a position of equilibrium in which the primer and detonator are in line with the firing pin and booster lead-in, respectively. This movement of the rotor does not actually take place until just outside the muzzle where setback ceases and the high side wall friction forces restraining the rotor disappear.

The rotor is now fully armed, the firing pin is released and the fuze functions as follows: The gas pressure and/or shock wave from the action of the nose fuze forces the obturating cup down and shears the sealing disc adjacent to the firing pin. The firing pin is in turn forced against the primer cap and anvil which functions the detonator, the booster lead-in and booster.

Arming Spin

Both the firing pin detents and the rotor detents arm between 3000 and 4500 rpm in static spin tests.

Safety Features

The rotor assembly and firing pin are held in the unarmed position by their respective safety detents. The fuze is armed only by centrifugal force. One set of detents holds the firing pin and one set holds the rotor unit in the unarmed position. In addition, centrifugal force is necessary to cause the counterweights to carry the rotor to its armed position when the added friction due to setback has ceased. If the detonator should fire in the unarmed position it would not detonate the booster charge.

Acceptance Tests

Sample fuzes from preliminary and each production lot are subjected to standard safety tests and to the following functioning tests:

Flight Test. Two fuzes are assembled in service loaded projectiles with dummy time fuzes and fired from a gun. The fuzes must not function to explode the bursting charge during flight.

Functioning Test. Five fuzes are assembled in standard service loaded projectiles each with a time fuze of proven high quality, and fired from a gun at various fuze settings, two of which correspond to the maximum range of the gun to insure bursts before impact. All fuzes must function to explode the bursting charge of the projectile with a HO detonation upon functioning of the time fuze.

Markings on Fuze

On the closing plug the following data are stamped:

AUX.
DET. FUZE
MK XVII — MOD ——

Lot No.— (Followed by Initial of Loading Plant) Manufacturer's Symbol; Anchor Sign; Year and Month of Loading; Inspector's Initials.

Remarks

The fuzes Mk 17 are no longer in production, having been superseded by fuzes Mk 46 and Mk 54 described in this OP. The Mod numbers 0-7 of the fuze Mk 17 denoted the different manufacturers of inert parts and not any difference in design. The Fuze Mk 17 Mod 8 was redesignated Auxiliary Detonating Fuze Mk 46.

Chapter 4

MECHANICAL TIME FUZE MARK 18 MODS 2, 3, AND 4

General Data

Designation and Type

Mechanical Time Fuze Mk 18 Mods 2, 3 and 4

Projectiles Used In

Illum.	AA Common	HC
4″/50	5″/25	5″/51
5″/25	5″/38	6″/47 S.P.
5″/38		6″/53
5″/51		
6″/47		
6″/53		

Overall Dimensions and Weight

Length ..... 4.313 in.
Body threads 1.70 in.-14NS-1RH
Weight ..... 2.33 lb. with zinc upper cap
2.50 lb. with brass upper cap

Material

Body .....Brass
Lower cap .....Brass
Upper cap .....Zinc or brass*

*All production since May 1943 has utilized zinc.

Applicable OS ..... 2114 Revision B

General Arrangement Drawing No. .. 267597

Explosives Used

Primer cap contains either F.A. 70 primer mixture consisting of potassium chlorate, antimony sulfide, TNT and lead sulfocyanate or the F.A. 70 primer mixture modified to contain 8% ground glass. Magazine charge consists of not less than 40 grains of black powder in a moistureproof plastic container.

Description

The 45-second Mechanical Time Fuze, Mk 18 type, is designed to initiate detonation of high explosive projectiles or to initiate functioning of an illuminating, W, or chemical projectile after a predetermined lapse of time. When employed for high explosive initiation, these time fuzes are used in conjunction with auxiliary detonating fuzes which are functioned by the pressure (not flame) produced by the burning of the black powder base charge of the mechanical time fuze.

In its assembled form the fuze consists of four main sub-assemblies: the movement assembly, the body, the lower cap and the upper cap. The movement assembly is attached to the inside of the body by three holding screws and contains the firing pin and the mechanism which eventually releases it. The brass body contains the magazine charge (not less than 40 grains of black powder in a plastic container which is practically impervious to moisture), the primer cap, a black powder relay pellet (to augment flame from primer) and the bottom closing screw. The lower cap is inscribed with a scale graduated in seconds for setting the fuze and is attached to the body by a joint characterized by a tensioning feature wherein the tensional resistance to rotative relative movement between lower cap and body is adjusted by four screws during assembly, at the fuze manufacturing plant. The lower cap and body are each provided with a lug for engagement in the slot of a fuze setter or hand setting wrench. The upper cap screws into the lower cap and completes the nose contour of the assembled fuze.

Operation

The timing movement of the fuze is a clockwork mechanism which utilizes centrifugal force acting on two weights for the primary driving force. To assist the weights in overcoming the initial inertia of the moving parts, there are as well two springs called "kick-off" springs. These are sufficiently strong to run the fuze timing movement for approximately 15 seconds by themselves.

The fuze is assembled in the unarmed condition and remains in this condition during transportation and storage. Setback force releases the mechanism so that it can be driven by centrifugal force aided by the "kick-off" springs; its rate being governed by

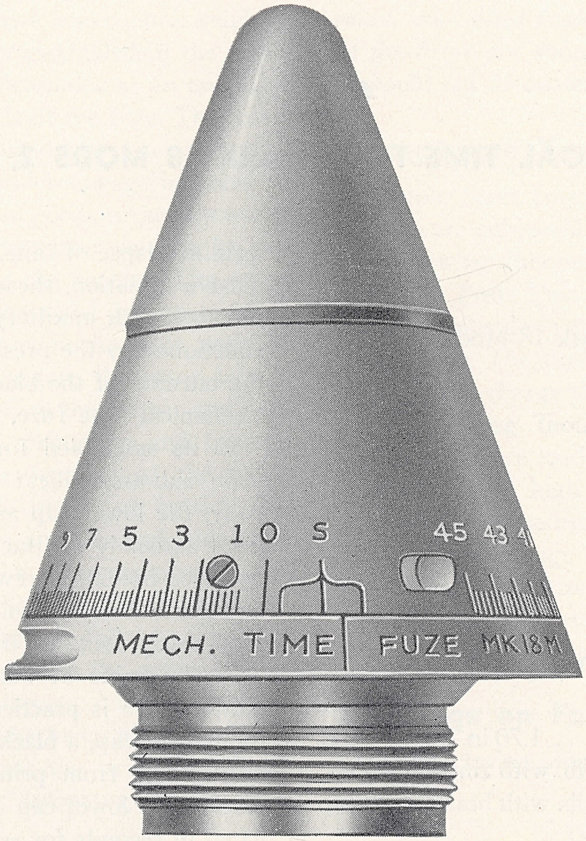

Figure 5.—Mechanical Time Fuze Mk 18 Mods 2, 3 and 4—Exterior View Full Size

an escapement. It is fired by a spring actuated firing pin which is released at the correct instant by a centrifugal controlled mechanism (the firing arm assembly). The timing element, termed the "timing disc," which receives the selective setting is connected to the main drive pinion shaft by a friction clutch which permits the timing disc to turn relative to the main drive pinion shaft during the setting operation. The entire gear train, including the main drive pinion shaft, is locked until released by another centrifugally controlled mechanism, the safety lever assembly. In order to turn the timing disc relative to the main drive pinion shaft, a setting pin is provided. This setting pin is fixed at one end to the top inside shoulder of the lower (rotative) cap in such a position as to be parallel to the longitudinal axis of the fuze. The free end of the setting pin engages the forked lug of the timing disc. Disengagement of the setting pin from the forked lug of the timing disc is effected under the force of setback by two small weights of the hammer spring assembly which depress the forked lug. As soon as the force of setback decreases from its maximum value the spring holder of the weights begins to return them to a forward position clear of the timing disc. The forked lug remains bent down. Thus, the timing disc is unlocked by the forces of setback.

Setback also moves the setback pin towards the base of the fuze, thus permitting subsequent rotation of the firing arm which will occur later at the preset time. The gear train, including the escapement mechanism, is also unlocked simultaneously, by another element (the safety lever and weight assembly) in the fuze. Almost at the same instant centrifugal force augmented by backlash and the two small "kick-off" springs, acts to start and sustain the movement of the timing disc in its measurement of the time interval for which the fuze has been preset. The speed of the timing disc and therefore the accuracy with which the predetermined interval of time will be measured depend essentially upon the accuracy of the escapement mechanism which governs

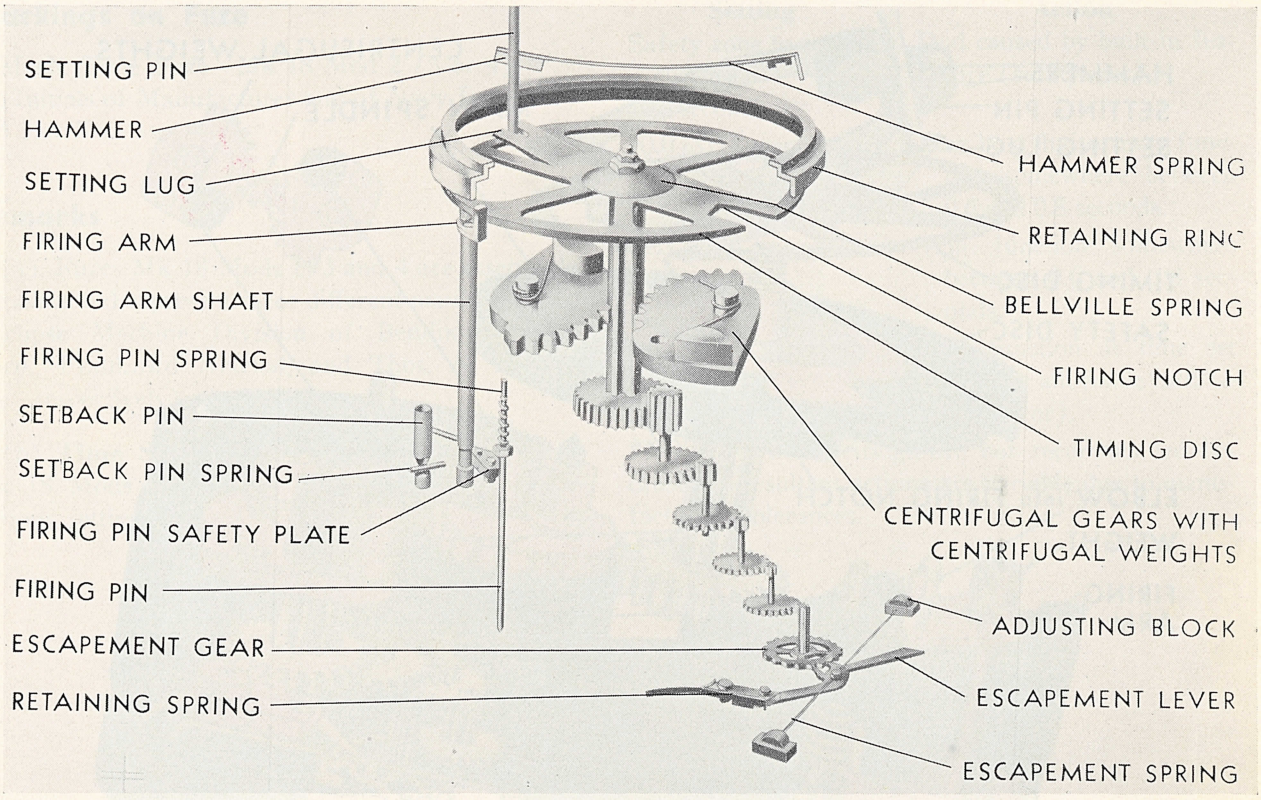

Figure 6.—Mechanical Time Fuze Mk 18—Schematic

the speed of the fuze movement. The escapement mechanism is adjusted statically and the completed movment assembly regulated dynamically prior to attaching the movement assembly to the inside of the fuze body. When the slot in the timing disc comes opposite the lug on the firing arm assembly, centrifugal force of the operating weight on the firing arm assembly moves it outward, thus turning the lug into the slot and revolving the shaft. (Note that the setback pin, which is kept in position by a holding spring, is driven down by the force of setback so that the stop pin on the firing arm shaft is free to move past it as soon as the projectile has been fired from the gun.) The revolving firing arm shaft clears the firing pin safety plate which moves outward, allowing the firing pin spring to drive the firing pin downward onto the primer.

The fuze functions at the end of the predetermined interval of time for which the fuze has been set, as indicated above. Functioning of the explosive train is initiated by the release of the spring actuated percussion type firing pin which impinges on a non-fulminate type of percussion primer. In turn flame from the primer impinges on the magazine charge which consists of 40 or more grains of black powder in a plastic container, located in the magazine or base of the fuze body. A small hollow black powder relay pellet is included in the primer screw assembly located in the fuze body, for purposes of augmenting the flame which ignites the black powder magazine charge.

Safety Features

(a) A setback pin prevents rotation of the firing arm and hence tripping of the spring-loaded firing pin through a connecting linkage until the setback pin is moved rearward by setback force.

(b) A spring-loaded safety lever prevents oscillation of the clockwork escapement until it rotates out of engagement by centrifugal force.

(c) When the fuze is set on "safe" or anything less than the prescribed minimum setting, the firing slot in the timing disc is covered by a safety disc so that if the timing disc were rotated into firing posi-

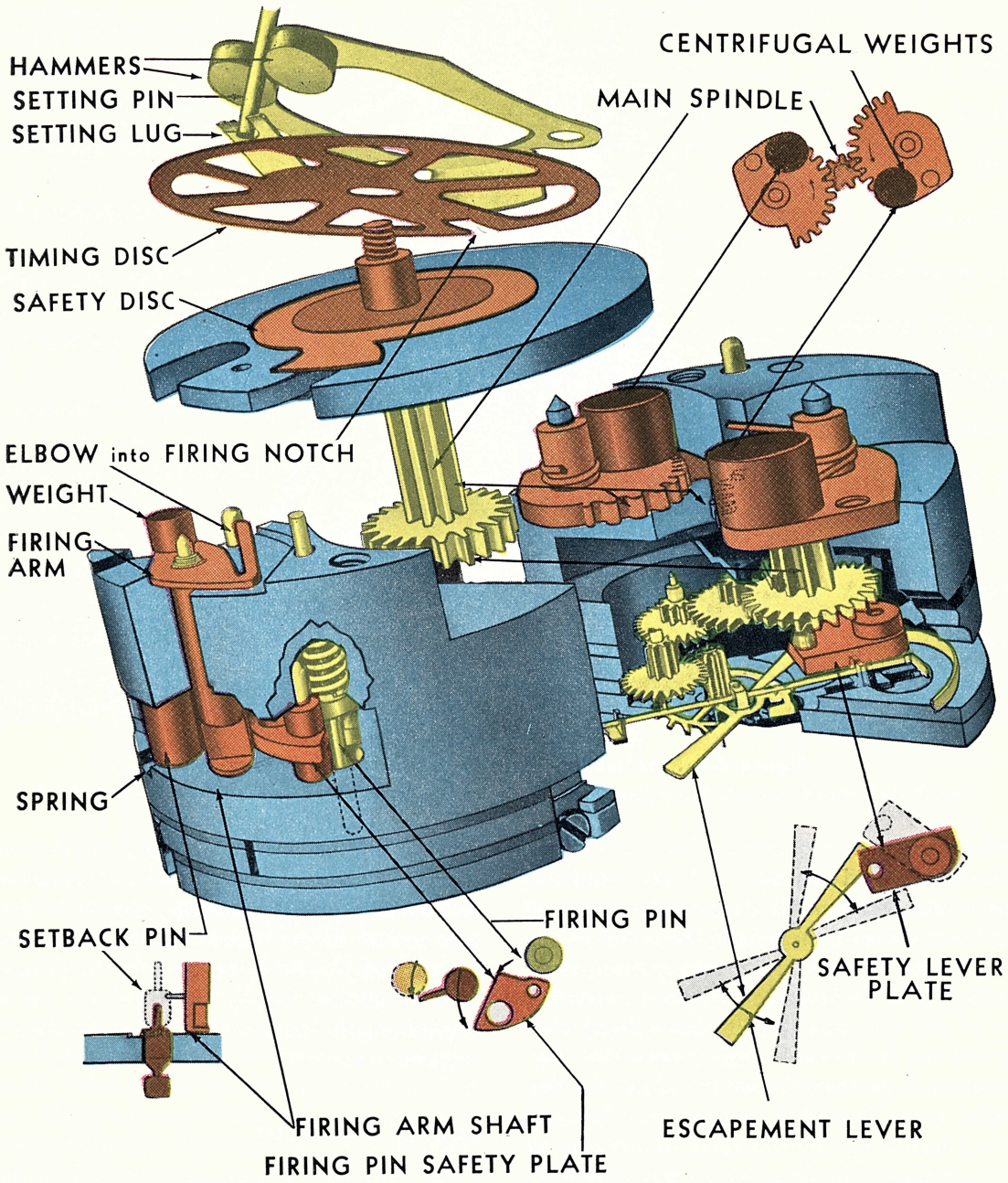

Figure 7.—Mechanical Time Fuze Mk 18—Exploded View

tion it could not release the firing arm and trip the firing pin.

(d) The timing disc is prevented from rotating by the setting pin, which passes between two prongs of a raised forked lug near the edge of the timing disc itself. This lug is bent down out of the way of the setting pin by the hammer in the upper cap when setback occurs.

Acceptance Functioning Tests

Sample fuzes from each production lot are fired at settings of 3, 10, 15, 20, 25, 30, and 40 seconds at various gun elevations. The actual mean time of flight and the dispersion obtained shall not differ from the setting by more than 0.08 seconds plus 0.005 times the setting.

Markings on Fuze

Mech. Time Fuze—Mk 18 Mod 2 (3 or 4)
(Initials of Manufacturer and of Navy Inspector) and Lot No.————.

Remarks

(a) Fuzes Mk 18 Mods 2, 3 and 4 are essentially the same and represent three different manufacturers (Eclipse Machine Division of Bendix Aviation Corp., Frankford Arsenal, and Thos. A. Edison, Inc., respectively).

(b) **Time Setting Characteristics.** The Fuzes Mk 18 Mods 2, 3 and 4 function as follows for various settings:

Setting	Action
Safety zone to and including 0.0 seconds	Dud caused by built-in feature (safety disc).
*0.0 to 0.3 seconds	May be a dud or may function somewhere between 0.6 and 0.8 seconds.
*0.3 to 0.6 seconds	Will function somewhere between 0.6 and 0.8 seconds.
0.6 to 45.0 seconds	Will function at time set (within allowable calibration error).

***NOTE:** These settings are not recommended because the resultant actions are variable due to manufacturing tolerances.

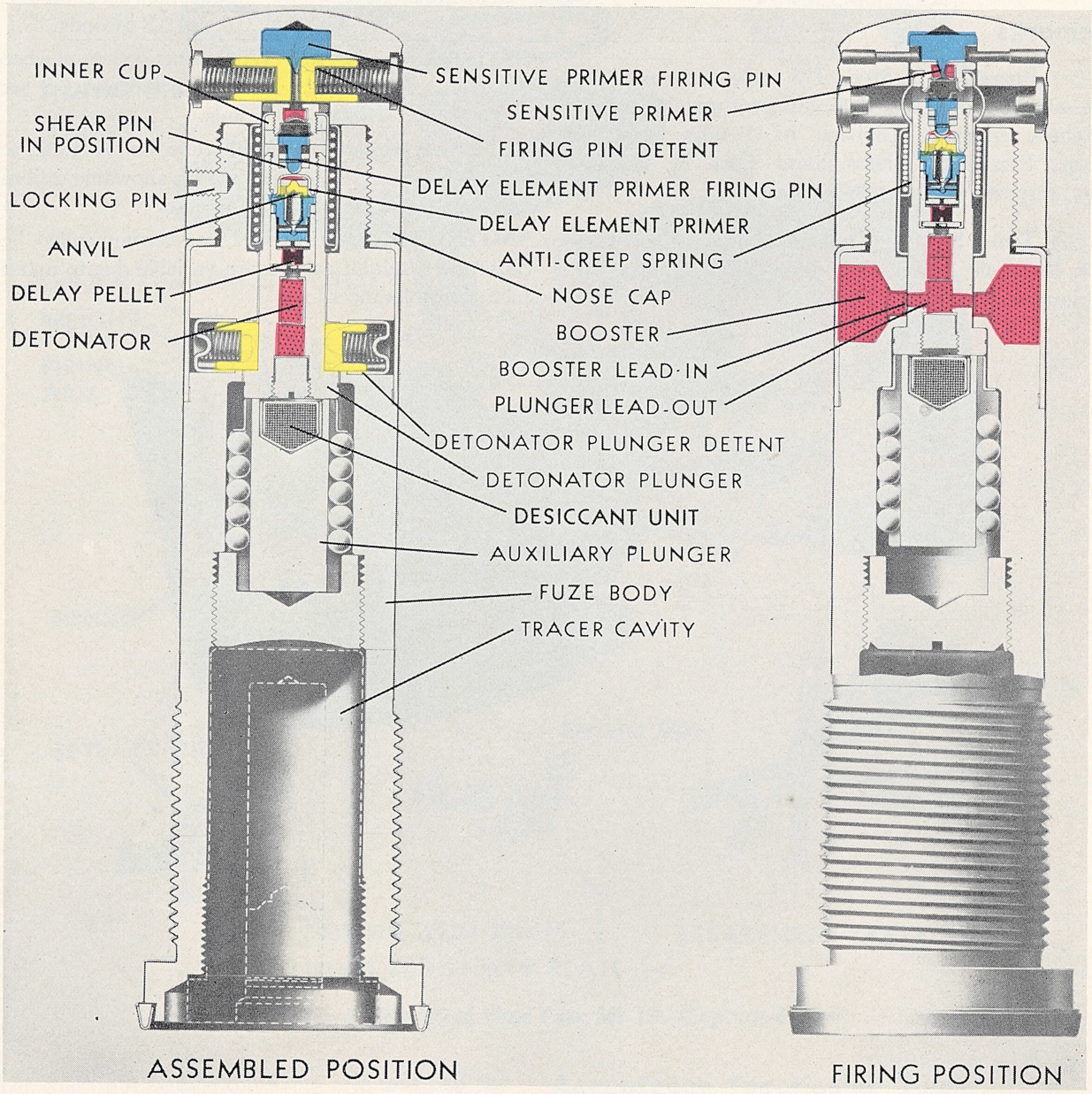

Figure 8.—Base Detonating Fuze Mk 19—Sectional View

Chapter 5

BASE DETONATING FUZE MARK 19

General Data

Designation and Type

Base Detonating Fuze Mk 19 Mod —

Projectiles Used In

6″/47 cal. Common Mk 28
6″/53 cal. Common Mk 27

Overall Dimensions and Weight

Length ..... 6.67 in.
Body thread length ..... 1.72 in.
Body threads ..... 1½ in—12NS-3LH
Weight ..... 1.87 lb. ± 0.05 lb.

Material

Body ..... Chrome molybdenum steel
Detonator plunger .. Chrome molybdenum steel
Nose cap ..... Aluminum alloy

Applicable OS 896

General Arrangement Drawing No. ... 206213

Explosives Used

1 Sensitive primer cap—fulminate of mercury cap mixture (includes potassium chlorate, antimony sulphide)
1 Delay primer cap—fulminate of mercury cap mixture (includes potassium chlorate, antimony sulphide)
1 Delay element (0.01 second)—Black powder
1 Detonator—Lead azide
1 Detonator plunger load—Tetryl
2 Plunger lead-outs—Tetryl
2 Booster lead-ins—Tetryl
2 Boosters—Tetryl

Description

The fuze is composed of two major parts, namely, the fuze body and the nose cap. The fuze body contains the plunger retaining plug, the auxiliary plunger assembly, the detonator plunger assembly, detents, anti-creep spring assembly and two sidewall boosters protected by a booster cover.

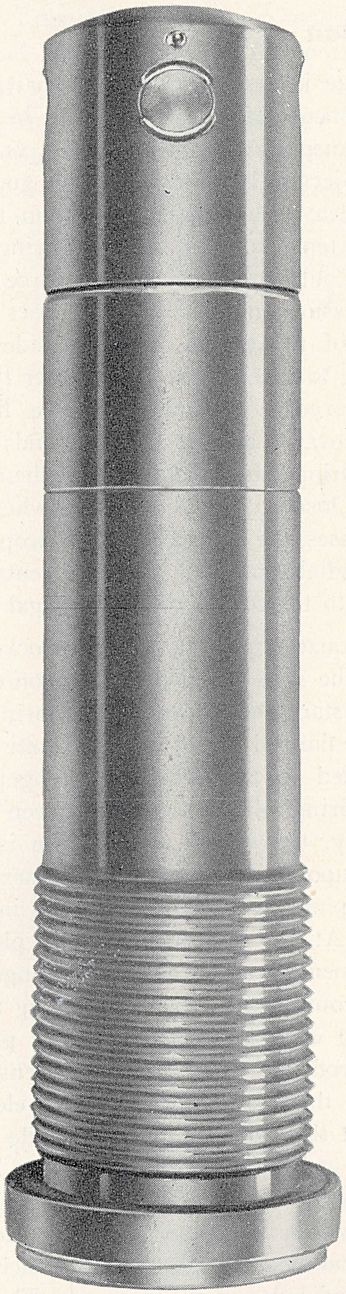

Figure 9.—Base Detonating Fuze Mk 19 Exterior View Full Size

655586—45——4

The nose cap, which is screwed onto the forward end of the fuze body, houses the sensitive firing pin and detents. A locking pin is provided to lock the nose cap in position after final assembly at the loading plant.

The base of the fuze body is fitted to receive a tracer Mk 5 type.

Operation

The fuze is assembled in the unarmed position. All components of the fuze remain in this position during transportation, storage, and until after the fuzed projectile is fired from the gun. After the projectile leaves the muzzle of the gun, the detonator plunger detents and the sensitive firing pin detents are forced outward by centrifugal force against their spring pressure and friction. This does not occur in the bore of the gun because the sidewall friction forces due to acceleration are greater than the centrifugal forces. Also, the sensitive firing pin is slightly movable and at setback binds against the sensitive firing pin detents holding them in the safe position. Close outside the muzzle where the acceleration ceases, the sidewall friction drops off sharply and the radially movable parts (detents) snap outward due to the continuous centrifugal force.

The detonator plunger is now unlocked but is retained in the safe (rearward) position during flight by the resistance of the anti-creep spring which acts against the flanged end of the inner anti-creep spring cup attached to the detonator plunger. Since the sensitive firing pin detents have been thrown out of the way, the sensitive firing pin is free to be impinged upon by the sensitive primer held in the detonator plunger, immediately upon impact of the projectile. At this time the detonator plunger, aided by the momentum of the auxiliary plunger on its ball bearings, continues forward impinging the sensitive primer cap onto the sensitive firing pin. The gas pressure from the explosion of the sensitive primer cap drives the round pointed delay element firing pin against the delay primer cap while at the same time these gases pass through the port holes on the side of the primer container and build up a high pressure within the inner cup for the anti-creep spring, expanding that part of cup which is adjacent to the drilled holes in the nose cap. The bulging of the inner cup for the anti-creep spring locks the detonator plunger in the forward firing position. In this firing position the lead-out holes in the plunger are in alignment with the booster lead-in holes. The firing of the detonator plunger delay primer cap in turn ignites the black powder delay element (0.01 second) which then functions the detonator, 2 plunger lead-outs, 2 booster lead-ins, 2 boosters and the projectile bursting charge.

Arming Spin

3000 to 4500 rpm.

Safety Features

The safety detent mechanisms are armed only by centrifugal force of a relatively high magnitude. Two sets of detents, one to prevent the sensitive primer from impinging on the sensitive firing pin, and the other set for holding the detonator plunger in the safe rearward position, insure that all four detents will not become accidentally withdrawn at the same time. Furthermore, the fuze is "detonator safe". That is, when the fuze is in the safe position (plunger rearward), and the detonator is set off by any cause, the force of the detonator is dissipated and the booster will not be detonated.

Sensitivity Limits

The Fuze Mk 19 in 6-in. Common projectiles will function at all probable striking velocities and obliquities against ¼-in. mild steel plate. It will function on ground and water impacts down to angles of fall of about 2° and 5°, respectively.

Acceptance Test Data

Samples from each production lot of fuzes are subjected to prescribed safety tests and also to the ballistic acceptance tests in 6-in. Common projectiles, see table on page 27. Acceptance of each lot is based on at least 80% performance. Each projectile should burst with high order detonation within 20 feet behind the plate.

Markings on Fuze

Around the exposed base of the fuze body the following data are stamped on each fuze: TDF Mk 19—Mod —; letters to indicate manufacturer of the fuze body; letters to indicate manufacturer of other inert parts; Inspector's initials; Lot No.; year and month of loading; letters to indicate loading plant. The "TDF" stands for "Tracer Detonating Fuze."

Rounds	Plate	Obliquity	Striking Velocity
2	¼″ mild steel	0°	1000 f/s
2	"	45°	1200 f/s
2	"	0°	2000 f/s
2	4″ Class B	35°	1800 f/s

Remarks

(a) The fuze Mk 19 is the original fuze of the currently used base fuze series and is very similar to Fuzes Mks 20, 21, 28, 39 and 48. It contains a black powder delay element which functions the detonator after 0.01 second duration. It also has the slight inherent mechanical delay peculiar to all inertia plunger type base fuzes. This delay is on the order of 0.003 seconds.

(b) The Fuze Mk 19 has been made and loaded by the Naval Torpedo Station, Newport. The Fuze Mk 19 Mod 1 is the moistureproofed design similar to that described in detail for the Fuze Mk 28 Mod 15. Fuzes Mk 19 Mod 1 have never been manufactured, however to meet limited requirements, a number of Fuzes Mk 19 type of older manufacture are being reconditioned, and moistureproofed at the Naval Torpedo Station, Newport, R. I.

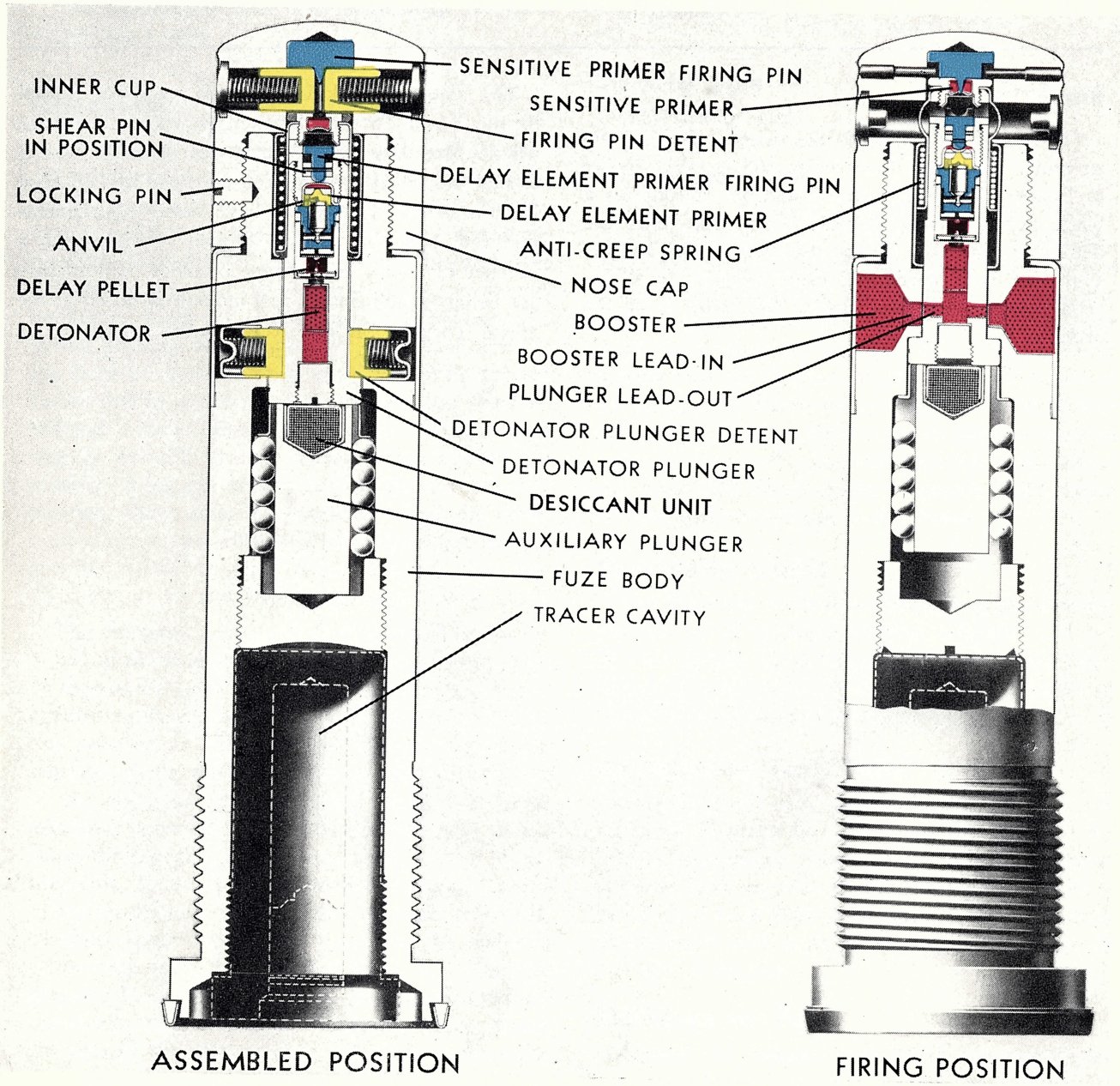

Figure 10.—Base Detonating Fuze Mk 20—Sectional View

Chapter 6

BASE DETONATING FUZE MARK 20

General Data

Designation and Type

Base Detonating Fuze Mk 20 Mod —

Projectiles Used In

Common
4″/50 cal. (Temporary assembly; Fuzes Mk 36 type are now used)
5″/38 cal.
5″/51 cal.
5″/54 cal.*
*See Fuzes Mk 19.

Overall Dimensions and Weight

Length	6.67 in.
Body thread length	1.258 in.
Body threads	1½ in.—12NF-3LH
Weight	1.87 lbs. ± 0.05 lb.

Material

Body	Pearlitic manganese steel
Detonator plunger	Pearlitic manganese steel
Nose cap	Aluminum alloy

Applicable OS 897

General Arrangement Drawing No. 423057

Explosives Used

1 Sensitive primer cap—fulminate of mercury cap mixture (includes potassium chlorate, antimony sulphide)
1 Delay primer cap—fulminate of mercury cap mixture (includes potassium chlorate, antimony sulphide)
1 Delay element (0.01 second)—Black powder
1 Detonator—Lead azide
1 Detonator plunger load—Tetryl
2 Plunger lead-outs—Tetryl
2 Booster lead-ins—Tetryl
2 Boosters—Tetryl

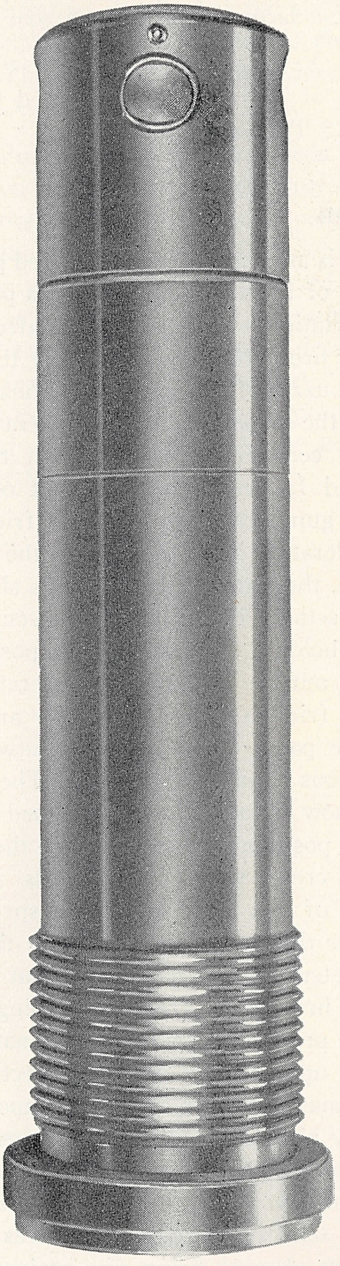

Figure 11.—Base Detonating Fuze Mk 20 Exterior View Full Size

Description

The fuze is composed of two major parts; namely, the fuze body and the nose cap. The fuze body con-

tains the plunger retaining plug, the auxiliary plunger assembly, the detonator plunger assembly, detents, anti-creep spring assembly and two sidewall boosters protected by a booster cover.

The nose cap, which is screwed onto the forward end of the fuze body houses the sensitive firing pin and detents. A locking pin is provided to lock the nose cap in position after final assembly at the loading plant. The fuze is moistureproofed by the application of a lacquer plus a final coat of Bakelite varnish.

The base of the fuze body is fitted to receive a Tracer Mk 5 Type.

Operation

The fuze is assembled in the unarmed position. All components of the fuze remain in this position during transportation, storage, and until after the fuzed projectile is fired from the gun. After the projectile leaves the muzzle of the gun, the detonator plunger detents and the sensitive firing pin detents are forced outward by centrifugal force against their spring pressure and friction. This does not occur in the bore of the gun because the sidewall friction forces due to acceleration are greater than the centrifugal forces. Also, the sensitive firing pin is slightly movable and at setback binds against the sensitive firing pin detents holding them in the safe position. Close outside the muzzle where the acceleration ceases, the sidewall friction drops off sharply and the radially movable parts (detents) snap outward due to the continuous centrifugal force. The detonator plunger is now unlocked but is retained in the safe (rearward) position during flight by the resistance of the anti-creep spring which acts against the flanged end of the inner anti-creep spring cap attached to the detonator plunger. Since the sensitive firing pin detents have been thrown out of the way the sensitive firing pin is free to be impinged upon by the sensitive primer cap held in the detonator plunger, immediately upon impact of the projectile. At this time the detonator plunger, aided by the momentum of the auxiliary plunger on its ball bearings, continues forward impinging the sensitive primer cap onto the sensitive firing pin. The gas pressure from the explosion of the sensitive primer cap drives the round pointed delay element firing pin against the delay primer cap while at the same time these gases pass thru the port holes on the side of the primer container, and build up a high pressure within the inner cup for the anti-creep spring expanding that part of the cap which is adjacent to the drilled holes in the nose cap. The bulging of the inner cup for the anti-creep spring locks the detonator plunger in the forward firing position. In this firing position the lead-out holes in the plunger are in alignment with the booster lead-in holes. The firing of the detonator plunger delay primer cap in turn ignites the black powder delay element (0.01 second) which then functions the detonator, 2 plunger lead-outs, 2 booster lead-ins, 2 boosters, and the projectile bursting charge.

Arming Spin

The fuze becomes armed shortly after leaving the muzzle. Detents are required to arm in static spin tests between 3000-4500 rpm.

Safety Features

The safety detent mechanisms are armed only by centrifugal force of a relatively high magnitude. Two sets of detents, one to prevent the sensitive primer from impinging on the sensitive firing pin, and the other set for holding the detonator plunger in the safe rearward position, insure that all four detents will not become accidentally withdrawn at the same time. Furthermore, the fuze is "detonator safe". That is, when the fuze is in the safe position (plunger rearward), and the detonator is set off by any cause, the force of the detonator is dissipated and the boosters will not be detonated.

Sensitivity Limits

The Fuze Mk 20 in 5-in. Common projectiles will function at all probable striking velocities and obliquities up to 80° against ¼-in. m.s. plate. It will function reliably on ground and water impacts down to angles of fall of 2° and 5°, respectively.

Acceptance Test Data

Samples from each production lot are subjected to prescribed safety tests and also to the following ballistic acceptance tests in 5-in. Common projectiles:

Rounds	Lots	Plate	Obliquity	Striking Velocity
2	All	¼" mild steel	0°	1000 f/s
2	"	"	45°	1200 f/s
2	"	"	0°	2000 f/s
4	Every 5th	1½" Cl.B	20°	1250 f/s

Acceptance of each lot is based on at least 80% performance. Each projectile should burst with high order detonation within 20 feet behind the plate.

Markings on Fuze

Around the exposed base of the fuze body the following data are stamped on each fuze:

Mk 20 Mod —; Lot No. —; Loading Plant's Initials; Year and Month of Loading; Inspector's Initials; Anchor Sign; Inert Parts Manufacturer's initials.

Remarks

(a) The Fuze Mk 20 is very similar to Fuzes Mk 19, 21, 28, 39 and 48. It contains a black powder delay element which functions the detonator after 0.01 second duration. It also has the slight inherent mechanical delay peculiar to all inertia plunger type base fuzes. This delay is on the order of 0.003 seconds.

(b) The Fuze Mk 20 type has been made and loaded by two activities; complete fuzes at Naval Torpedo Station, Newport; and inert parts at Naval Ordnance Plant, Milledgeville, Ga., while loading of the latter parts is being conducted at Naval Ordnance Plant, Macon, Ga. The Fuzes Mk 20 Mod 1 and Mod 2 are the moistureproofed designs shown on Naval Torpedo Station, Newport, R. I., and Bureau of Ordnance drawings, respectively. The moistureproof design is described in detail under Fuzes Mk 28 Mod 15.

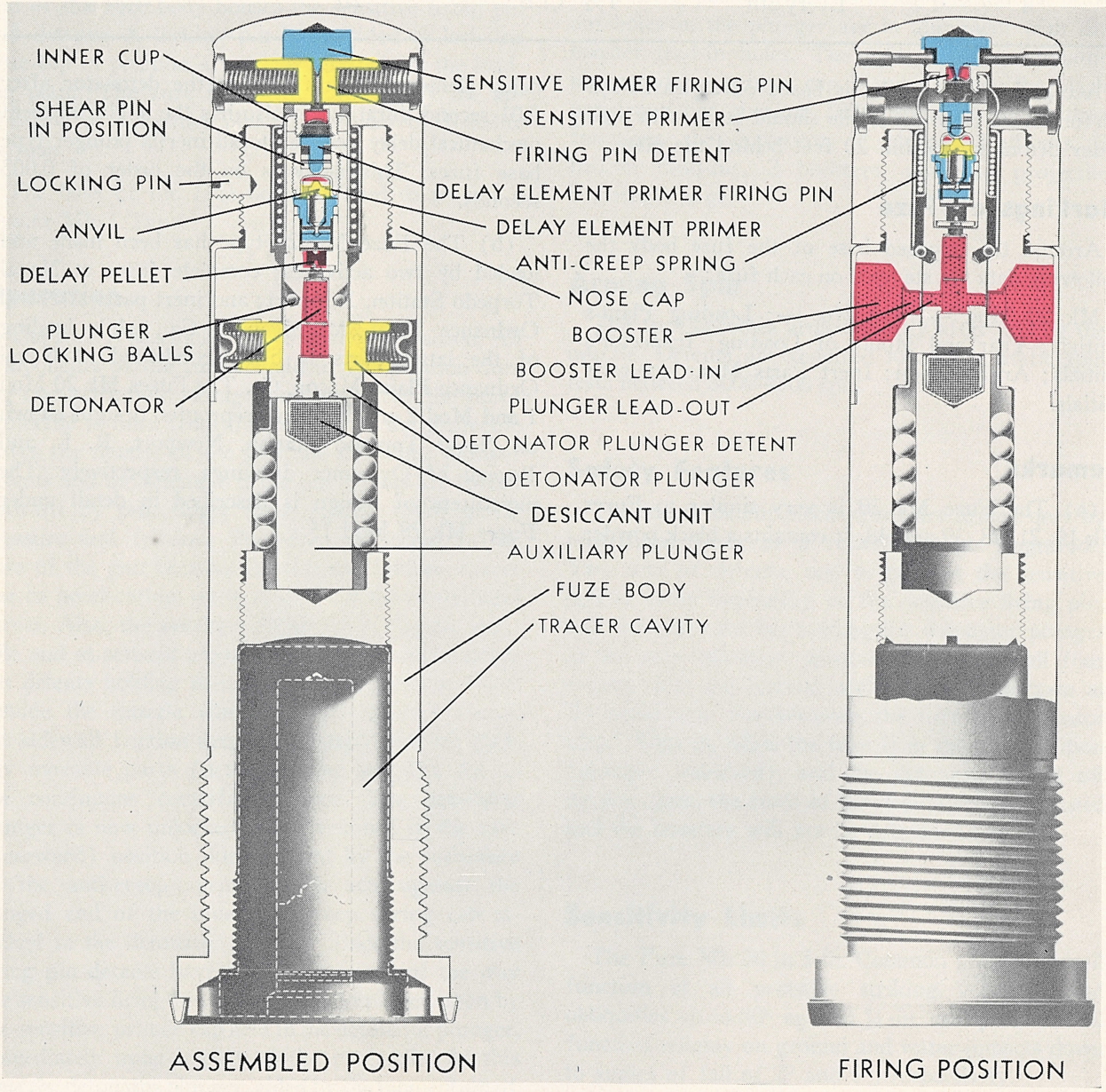

Figure 12.—Base Detonating Fuze Mk 21—Sectional View

Chapter 7

BASE DETONATING FUZE MARK 21

General Data

Designation and Type

Base Detonating Fuze Mk 21 Mod —

Projectiles Used In

AP.....6″, 8″, 12″, 14″, 16″

Overall Dimensions and Weight

Length ..... 6.75 in.
Body thread length ..... 1.258 in.
Body threads .....1½ in.—12NF-3LH
Weight ..... 1.88 ± 0.05 lb.

Material

Body ..... Chrome molybdenum steel
Detonator plunger... Chrome molybdenum steel
Nose cap ..... Aluminum alloy

Applicable OS ..... 2506 Rev. C

General Arrangement Drawing No..... 225563

Explosives Used

1 Sensitive primer cap—Fulminate of mercury cap mixture (includes potassium chlorate, antimony sulphide)
1 Delay primer cap—Fulminate of mercury cap mixture (includes potassium chlorate and antimony sulphide)
1 Delay element (0.033 second)—Black powder
1 Detonator—Lead azide
1 Detonator plunger load—Tetryl
2 Plunger lead-outs—Tetryl
2 Booster lead-ins—Tetryl
2 Boosters—Tetryl

Description

The fuze is composed of two major parts, namely, the fuze body and the nose cap. The fuze body contains the plunger retaining plug, the auxiliary plunger assembly, the detonator plunger assembly, detents, anti-creep spring assembly and two sidewall boosters protected by a booster cover.

The nose cap which is screwed onto the forward end of the fuze body houses the sensitive firing pin and detents. A locking pin is provided to lock the nose cap in position after final assembly at the loading plant. The fuze is moistureproofed by the application of a lacquer plus a final coat of Bakelite varnish.

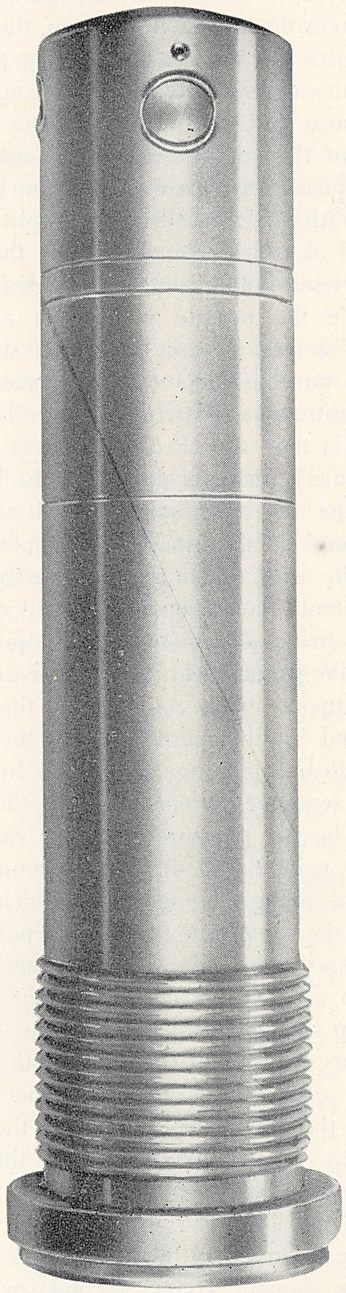

Figure 13.—Base Detonating Fuze Mk 21 Exterior View Full Size

655586—45——5

The base of the fuze body is fitted to receive a Tracer Mk 5 Type.

Operation

The fuze is assembled in the unarmed position. All components of the fuze remain in this position during transportation, storage, and until after the fused projectile is fired from the gun. After the projectile leaves the muzzle of the gun, the detonator plunger detents and the sensitive firing pin detents are forced outward by centrifugal force against their spring pressure and friction. This does not occur in the bore of the gun because the sidewall friction forces due to acceleration are greater than the centrifugal forces. Also, the sensitive firing pin is slightly movable and at setback binds against the sensitive firing pin detents holding them in the safe position. Close outside the muzzle where the acceleration ceases, the sidewall friction drops off sharply and the radially movable parts (detents) snap outward due to the continuous centrifugal force. The detonator plunger is now unlocked but is retained in the safe (rearward) position during flight by the resistance of the anti-creep spring which acts against the flanged end of the inner anti-creep spring cup attached to the detonator plunger. Since the sensitive firing pin detents have been thrown out of the way the sensitive firing pin is free to be impinged upon by the sensitive primer held in the detonator plunger immediately upon impact. At this time the detonator plunger, aided by the momentum of the auxiliary plunger on its ball bearings, continues forward impinging the sensitive primer cap onto the sensitive firing pin. The gas pressure from the explosion of the sensitive primer cap drives the round pointed delay element firing pin against the delay primer cap while at the same time these gases pass through the port holes on the side of the primer container and build up a high pressure within the inner cup for anti-creep spring expanding that part of the cap which is adjacent to the drilled holes in the nose cap. The bulging of the inner cup for the anti-creep spring locks the detonator plunger in the forward firing position. In this firing position the lead-out holes in the plunger are in alignment with the booster lead-in holes. The firing of the detonator plunger delay primer cap in turn ignites the black powder delay element (0.033 second) which then functions the detonator, 2 plunger lead-outs, 2 booster lead-ins, 2 boosters, and the projectile bursting charge.

The Fuze Mk 21 type contains a mechanical feature not present in any of the other base fuzes of this type. The detonator plunger has four shallow holes drilled into its sides at an angle inclined to the axis of the plunger. A small steel ball is placed in each hole. After forward motion of the plunger on impact, centrifugal force causes the balls to fly out of their recesses into the forward or larger diameter portion of the body cavity. This locks the plunger in the forward position providing a lock in addition to that produced by the expansion of the inner anti-creep spring cup by explosion of the sensitive primer cap. Since the Fuze Mk 21 type contains a relatively long delay of 0.033 second this additional plunger locking device is valuable to keep the detonator plunger lead-outs correctly aligned with the booster lead-ins during the delay period while the projectile may be experiencing violent shocks, changes in position and direction during penetration of a ship's structure.

Arming Spin

The fuze becomes armed shortly after leaving the muzzle. Detents are required to arm in static spin tests between 1200 and 1400 rpm.

Safety Features

The safety detent mechanisms are armed only by centrifugal force of a relatively high magnitude. Two sets of detents, one to prevent the sensitive primer from impinging on the sensitive firing pin, and the other set for holding the detonator plunger in the safe rearward position, insure that all four detents will not become accidentally withdrawn at the same time. Furthermore, the fuze is "detonator safe". That is, when the fuze is in the safe position (plunger rearward), and the detonator is set off by any cause, the force of the detonator is dissipated and the boosters will not be detonated.

Sensitivity Limits

The Fuze Mk 21 in 6-in. AP projectiles will function at all probable striking velocities and obliquities against ⅜-in. m.s. plate. At the other end of the projectile scale, in the 2700-lb. 16-in. AP projectile, the Fuze Mk 21 functions at 1000 f/s striking velocity on ½-in. STS at 60° obliquity and on 1-in.-1½-in. STS at 30° obliquity. When firing through several successive thin plates several feet apart, individually too light to initiate fuze action, there is no cumulative effect and no fuze action is probable.

Acceptance Test Data

Since about 80% of all Fuzes Mk 21 now being made are assembled into 6-in. AP projectiles, four out of five production lots are tested, as follows, in 6-in. AP projectiles and those lots earmarked for such assembly only.

Test	Number	Plate	Obliquity	Striking Velocity
A	5	3¾"-5" Cl. A or B	30-45	Adequate to give about 1500 f/s remaining velocity
B	5	"	"	Same but 1000 f/s R.V.
C	5	"	"	Same but 500 f/s R.V.
D	5	⅜"-⅝"	"	2300-2100 f/s
E	5	"	"	1000-1200 f/s
F	3	Flight test for prematures are conducted using three rounds out of every 20th lot. Projectiles are fired down river using proof or near proof charges in a 6"/47 gun. Guns of various degrees of wear are used, including frequent tests in guns in the last third of their normal life.		

Lots are tested as follows:

Lot numbers ending in:

1, 2 or 3—Test A
4, 5 or 6—Test B
7, 8 or 9—Test C
10, 20, 30—Test D or E (Alternate) and F.

Acceptance is based on 80% high order functioning within 30′ to 70′ behind the plate, assuming the remaining velocity had been 1000 f/s in each case. A premature on any test shall be cause for rejection of the lot.

Lots of Fuzes Mk 21 which are not designated solely for 6-in. assembly are used in 8-in. to 16-in. AP projectiles and are given the following ballistic tests for acceptance:

Test	No.	AP Projectile	Plate	Obliquity	Striking Velocity
A	3	8" Mk 21, 335 lb.	3¾"-6" Cl. A or B	30°-45°	Enough to give about 1500 f/s R.V.
A-1	3	8" Mk 21, 335 lb.	3¾"-6" Cl. A or B	30°-45°	About 1000 f/s R.V.
A-2	3	8" Mk 21, 335 lb.	3¾"-6" Cl. A or B	30°-45°	About 500 f/s R.V.
B	3	8" Mk 21, 335 lb.	2"-4" Cl. B	45°-60°	1150 to 1250 f/s R.V.
C	3	8" Mk 21, 335 lb.	⅝" STS	60°-70°	About 1500 f/s R.V.
C-1	3	8" Mk 21, 335 lb.	⅝" STS	60°-70°	1000 f/s R.V.
D	3	12" Mk 18, 1140 lb.	7"-12" Cl. A or B	30°-40°	1500 f/s
D-1	3	12" Mk 18, 1140 lb.	7"-12" Cl. A or B	30°-40°	1000 f/s
D-2	3	12" Mk 18, 1140 lb.	7"-12" Cl. A or B	30°-40°	500 f/s
E	3	14" Mk 16 or 20, 1500 lb.	12"-17" Cl. A	30°-40°	1500 f/s
E-1	3	14" Mk 16 or 20, 1500 lb.	12"-17" Cl. A	30°-40°	1000 f/s
E-2	3	14" Mk 16 or 20, 1500 lb.	12"-17" Cl. A	30°-40°	500 f/s
F	3	14" Mk 16 or 20, 1500 lb.	¾"-1½" STS	30°-70°	1500 f/s
F-1	3	14" Mk 16 or 20, 1500 lb.	¾"-1½" STS	30°-70°	1000 f/s
G	3	16" Mk 5, 2240 lb.	12"-17" Cl. A	30°-40°	1500 f/s
G-1	3	16" Mk 5, 2240 lb.	12"-17" Cl. A	30°-40°	1000 f/s
G-2	3	16" Mk 5, 2240 lb.	12"-17" Cl. A	30°-40°	500 f/s
H	3	16" Mk 8, 2700 lb.	12"-17" Cl. A	30°-40°	1500 f/s
H-1	3	16" Mk 8, 2700 lb.	12"-17" Cl. A	30°-40°	1000 f/s
H-2	3	16" Mk 8, 2700 lb.	12"-17" Cl. A	30°-40°	500 f/s

Test	No.	AP Projectile	Plate	Obliquity	Striking Velocity
I	3	16″ Mk 8, 2700 lb.	1″-1½″ STS	30°	1500 f/s
I-1	3	16″ Mk 8, 2700 lb.	1″-1½″ STS	30°	1000 f/s
J	3	14″ or 16″ AP (any Mark)	¾″ STS	30°	1500 f/s
			½″ STS	60°	1000 f/s
			12″-17″ Cl. A	30°-40°	500 f/s
			Spaced 8′ to 12′ Apart		
K	3	8″ to 16″ AP (any Mark)	Flight test: Fired down river at proof or near proof charges in guns of various degrees of wear, including frequent tests in guns in the last third of their normal life.		

Acceptance on the lot is based 66⅔% high order functioning on all plate tests, within 30-ft. to 70-ft. behind the first plate heavy enough to initiate fuze action, assuming residual velocity had been 1000 f/s in each case.

Markings on Fuze

Around the exposed base of the fuze body the following data are stamped on each fuze: Mk 21 Mod —; Lot —; Loading Plant's Initials; Year and Month of Loading; Inspector's Initials; Anchor Sign; Inert Parts Manufacturer's Initials.

Remarks

The Fuze Mk 21 is very similar to Fuzes Mk 19, 20, 28, 39 and 48. It contains a black powder delay element, which functions the detonator after 0.033 second duration. It also has the slight inherent mechanical delay peculiar to all inertia plunger type base fuzes. This delay is on the order of 0.003 second. All Fuzes Mk 21 (no Mod) were made and loaded at the Naval Torpedo Station, Newport. The Fuze Mk 21 Mod 1 is the moistureproofed design as described in detail for the Fuze Mk 28 Mod 15. All loading is done at Newport using inert parts made by both the Naval Gun Factory and Newport. At present Naval Ordnance Plant, Milledgeville, Ga., is tooling to produce these fuzes, while Naval Ordnance Plant, Macon, Ga., will load them.

Chapter 8

MECHANICAL TIME FUZE MARK 22 MODS 4, 5, AND 6

General Data

Designation and Type

Mechanical Time Fuze Mk 22 Mods 4, 5 and 6

Projectiles Used in

Illum.	AA	HC
3″/23	3″/23	4″/50
3″/50	3″/50	

Overall Dimensions and Weight

Length ..... 4.55 in.
Body threads ..... 1.70 in.—14NS-1RH
Weight ..... 1.38 ± 0.035 lb.

Material

Body ..... Aluminum
Lower cap ..... Brass
Upper cap ..... Aluminum

Applicable OS 3004

General Arrangement Drawing No.

(Mod 5)..... 439797
(Mod 4)..... 439795

Explosives Used

Primer cap contains either F.A. 70 primer mixture consisting of potassium chlorate, antimony sulfide, TNT and lead sulfocyanate or the F.A. 70 primer mixture modified to contain 8% ground glass. Magazine charge consists of not less than 40 grains of black powder in a moistureproof plastic container.

Description

The 30-second Mechanical Time Fuze Mk 22 type is designed to initiate detonation of a high explosive projectile or to initiate functioning of an illuminating, W, or chemical projectile after a predetermined lapse of time. When employed for high explosive initiation, these time fuzes are used in conjunction with auxiliary detonating fuzes which are functioned by the pressure (not flame) produced by the burning of the black powder base charge of the mechanical time fuze. In its assembled form the fuze consists of four main sub-assemblies; the movement assembly, the body, the lower cap and the upper cap. The movement assembly is attached to the inside of the body by three holding screws and contains the firing pin and the mechanism which eventually releases it. The aluminum body contains the magazine charge (not less than 40 grains of black powder in a plastic container which is practically impervious to moisture), the primer cap, a black powder relay pellet (to augment flame from primer) and the bottom closing screw. The body is inscribed with a scale graduated in seconds for setting the fuze.

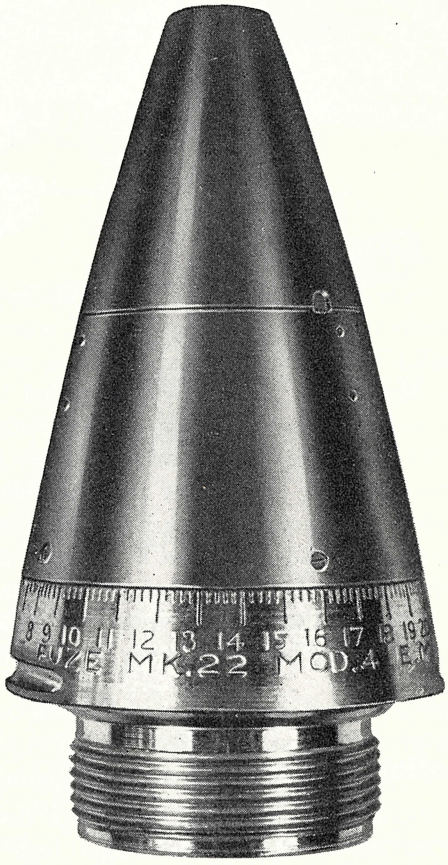

Figure 14.—Mechanical Time Fuze Mk 22 Mods 4, 5 and 6—Exterior View Full Size

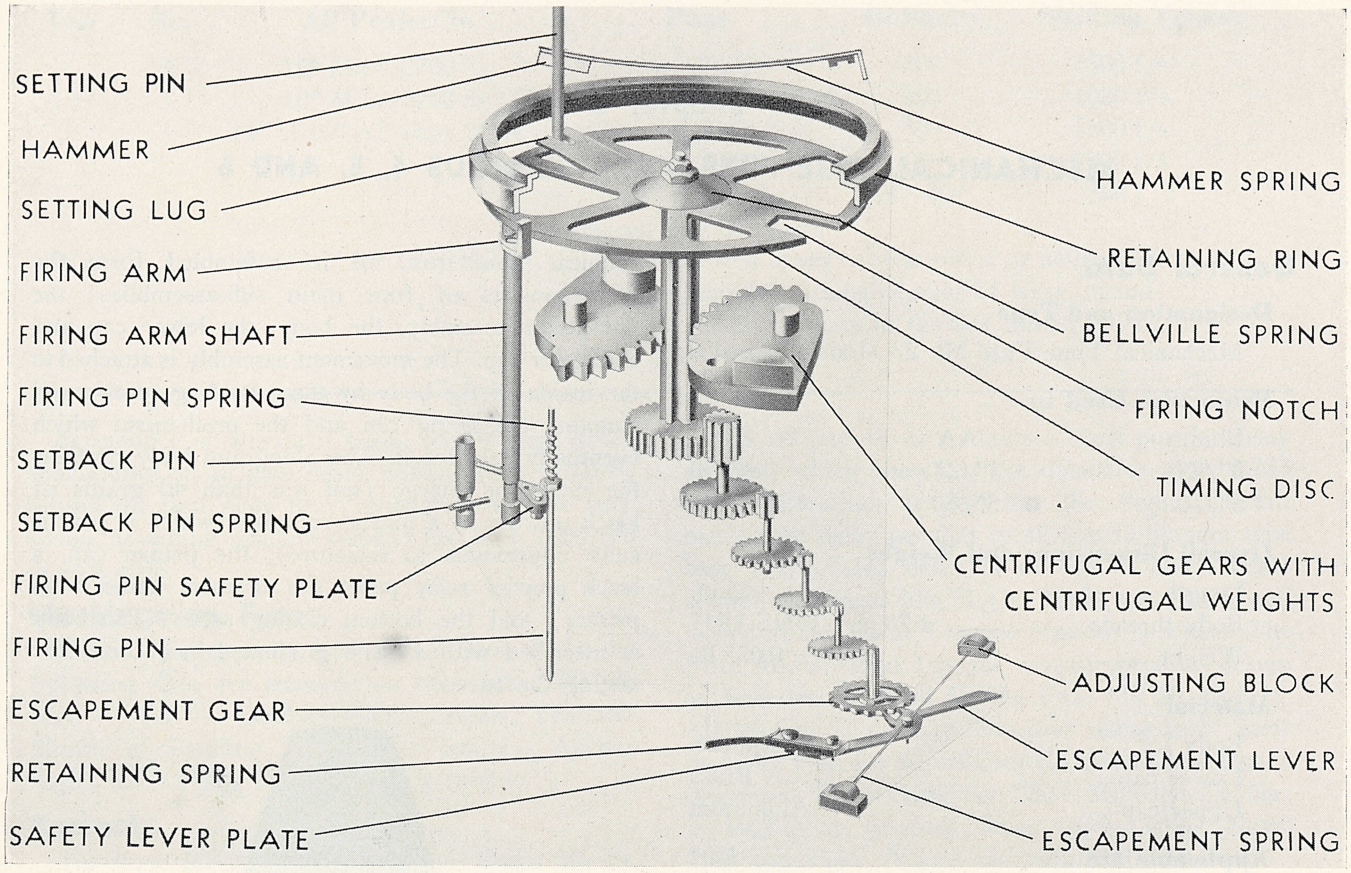

Figure 15.—Mechanical Time Fuze Mk 22—Schematic

The lower cap is attached to the body by a joint characterized by a tensioning feature wherein the tensional resistance to rotative relative movement between lower cap and body is adjusted by four screws during assembly, at the fuze manufacturing plant. The upper cap screws into the lower cap and completes the nose contour of the assembled fuze. The body and lower cap each have a slot cut into them parallel to the fuze axis into which the lugs of the fuze setter fit in order to set the fuze. This differs from the Fuze Mk 18 type which has projecting lugs on the body and lower cap for the same purpose.

Operation

The operating part of the fuze is a clockwork mechanism which utilizes centrifugal force acting on two weights for the primary driving force. This fuze does not employ the "kick-off" springs described for the Fuze Mk 18 type. The fuze is assembled in the unarmed condition and remains in this condition during transportation and storage. Set-back force releases the mechanism so that it can be driven by centrifugal force; its rate being governed by an escapement. It is fired by a spring actuated firing pin which is released at the correct instant by a centrifugal controlled mechanism (the firing arm assembly). The timing element, termed the "timing disc," which receives the selective setting from the fuze setter is connected to the main drive pinion shaft by a friction clutch which permits the timing disc to turn relative to the main drive pinion shaft during the setting operation. The entire gear train, including the main drive pinion shaft, is locked until released by another centrifugally controlled mechanism, the safety lever assembly. In order to turn the timing disc relative to the main drive pinion shaft, a setting pin is provided. This setting pin is fixed at one end to the top inside shoulder of the

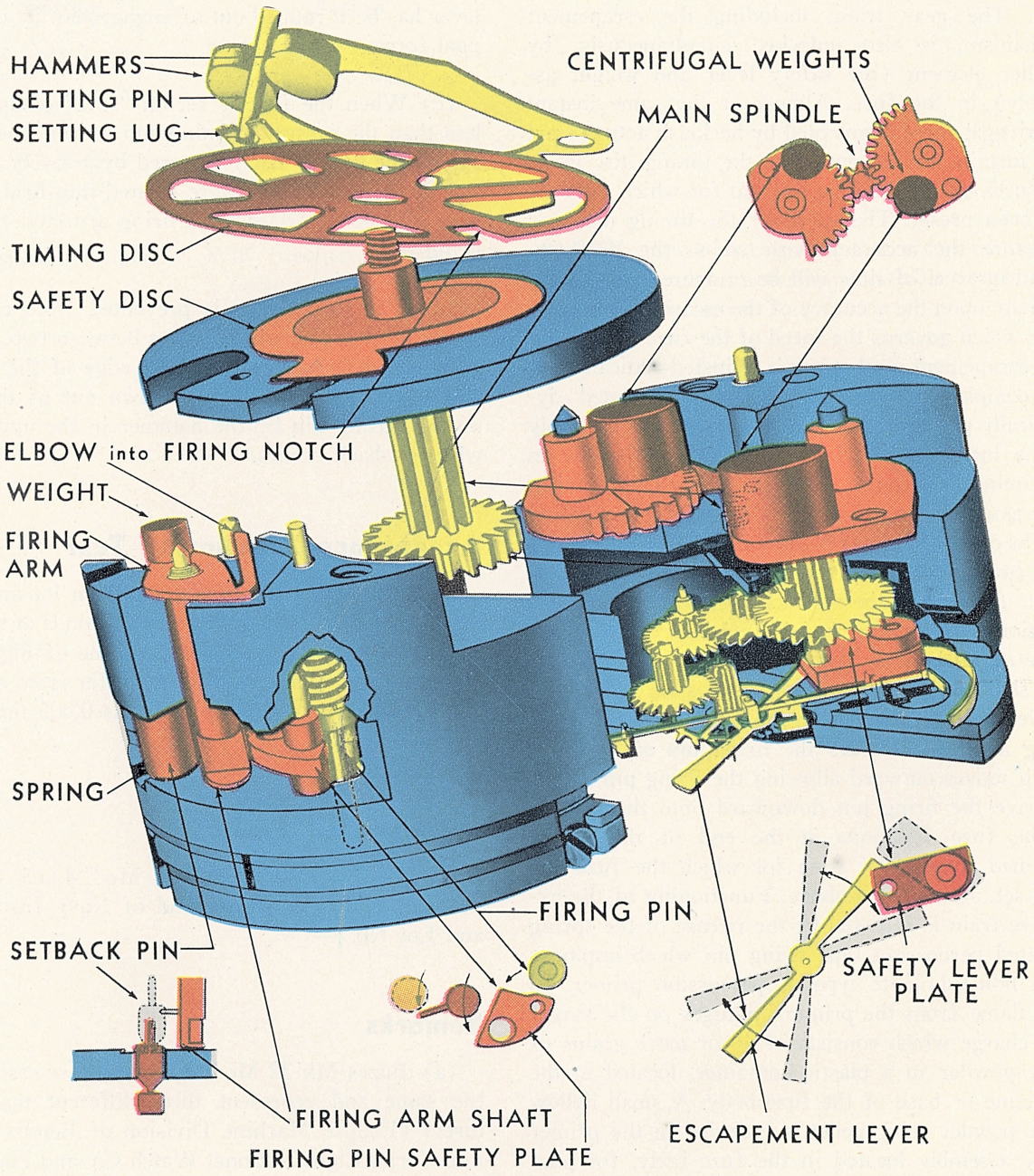

Figure 16.—Mechanical Time Fuze Mk 22 Mods 4, 5 and 6—Exploded View

lower (rotative) cap in such a position as to be parallel to the longitudinal axis of the fuze. The free end of the setting pin engages the forked lug of the timing disc. Disengagement of the setting pin from the forked lug of the timing disc is effected under the force of setback by two small weights of the hammer spring assembly which depress the forked lug. As soon as the force of set-back decreases from its maximum value the spring holder of the weights begins to return them to a forward position clear of the timing disc. The forked lug remains bent down. Thus, the timing disc is unlocked by the forces of set-back.

Set-back also moves the set-back pin towards the base of the fuze, thus permitting subsequent rotation of the firing arm which will occur later at the preset

time. The gear train, including the escapement mechanism, is also unlocked simultaneously, by another element (the safety lever and weight assembly) in the fuze. Almost at the same instant centrifugal force augmented by backlash acts to start and sustain the movement of the timing disc in its measurement of the time interval for which the fuze has been preset. The speed of the timing disc and therefore the accuracy with which the predetermined interval of time will be measured depend essentially upon the accuracy of the escapement mechanism which governs the speed of the fuze movement. The escapement mechanism is adjusted statically and the completed movement assembly regulated dynamically prior to attaching the movement assembly to the inside of the fuze body. When the slot in the timing disc comes opposite the lug on the firing arm assembly, centrifugal force of the operating weight on the firing arm assembly moves it outward thus turing the lug into the slot and revolving the shaft. (Note that the set-back pin, which is kept in position by a holding spring, is driven down by the force of set-back so that the stop pin on the firing arm shaft is free to move past it as soon as the projectile has been fired from the gun.) The revolving firing arm shaft clears the firing pin safety plate which moves outward allowing the firing pin spring to drive the firing pin downward onto the primer.

The fuze functions at the end of the predetermined interval of time for which the fuze has been set, as indicated above. Functioning of the explosive train is initiated by the release of the spring actuated percussion type firing pin which impinges on a non-fulminate type of percussion primer. In turn flame from the primer impinges on the magazine charge which consists of 40 or more grains of black powder in a plastic container, located in the magazine or base of the fuze body. A small hollow black powder relay pellet is included in the primer screw assembly located in the fuze body, for purposes of augmenting the flame which ignites the black powder magazine charge.

Safety Features

(a) A set-back pin prevents rotation of the firing arm and hence tripping of the spring-loaded firing pin through a connecting linkage until the set-back pin is moved rearward by set-back force.

(b) A spring-loaded safety lever prevents oscillation of the clockwork escapement until the safety lever has been rotated out of engagement by centrifugal force.

(c) When the fuze is set on "safe" or anything less than the prescribed minimum setting, the firing slot in the timing disc is covered by a safety disc so that if the timing disc were rotated into firing position it could not release the firing arm and trip the firing pin.

(d) The timing disc is prevented from rotating by the setting pin, which passes between two prongs of a raised forked lug near the edge of the timing disc itself. This lug is bent down out of the way of the setting pin by the hammer in the upper cap when set-back occurs.

Acceptance Functioning Test

Sample fuzes from each production lot are fired at settings of 3, 10, 15, 20 and 25 seconds at various gun elevations. The actual mean time of flight and the dispersion obtained shall not differ from the setting by more than 0.08 second plus 0.005 times the setting.

Markings on Fuze

Mech. Time Fuze Mk 22 Mod 4 (5 or 6). (Initials of Manufacturer and of Navy Inspector) and Lot No. —

Remarks

(a) Fuzes Mk 22 Mods 4, 5 and 6 are essentially the same and represent three different manufacturers (Eclipse Machine Division of Bendix Aviation Corp., Elgin National Watch Co. and Hamilton Watch Co., respectively).

(b) Fuzes Mk 22 type are very similar to U. S. Army fuzes M43 A3 type. Some of the fuzes M43 A3 have been obtained from the Army and assembled in Navy ammunition without change of fuze markings.

(c) Time Setting Characteristics:—The Fuze Mk 22 Mods 4, 5 and 6 function as follows for various settings:

Setting	Action
Safety zone to and including 0.3 seconds	Dud caused by built-in feature (safety disc)
*0.3 to 0.6 seconds	May be a dud or may function somewhere between 0.6 and 0.8 seconds
0.6 to 30.0 seconds	Will function at time set (within allowable calibration error)

***NOTE:** These settings are not recommended because the resultant actions are variable due to manufacturing tolerances.

655586—45——6

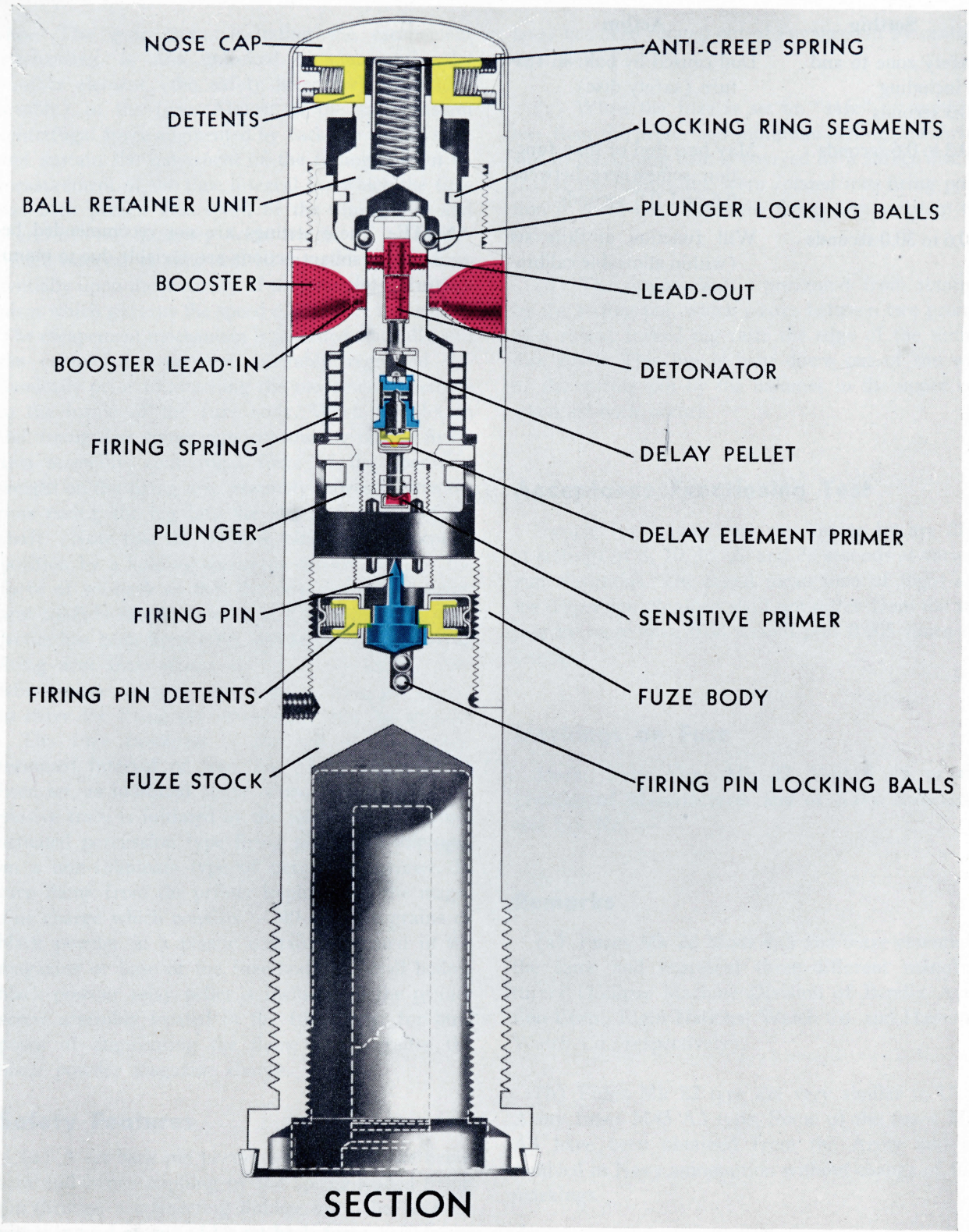

Figure 17.—Base Detonating Fuze Mk 23—Sectional View

Chapter 9

BASE DETONATING FUZE MARK 23

General Data

Designation and Type

Base Detonating Fuze Mk 23

Projectiles Used In

8″/55 Common	260 lb.
8″/55 AP	260 lb. and 335 lb.
12″/50 AP	
14″/45-50 AP	1400 lb. and 1500 lb.
16″/45 AP	2100 lb., 2240 lb. and 2700 lb.

Overall Dimensions and Weight

Length	7.730 in.
Fuze stock, thread length	1.258 in.
Fuze stock, threads	1.50 in.—12NF-3LH
Weight	2 lb., 7 oz.

Material

Stock and body.....Steel, cadmium plated

Applicable OS 2490

General Arrangement Drawing No.... 236870

Explosives Used

1 Sensitive primer cap—Fulminate of mercury mixture (includes potassium chlorate and antimony sulphide)
1 Delay primer cap—Fulminate of mercury mixture (includes potassium chlorate and antimony sulphide)
1 Delay element (0.02 second)—Black powder
1 Detonator—Lead azide
1 Detonator plunger load—Tetryl
2 Plunger lead-outs—Tetryl
2 Booster lead-ins—Tetryl
2 Boosters—Tetryl

Description

The fuze is composed of three major parts; namely, the fuze stock, the fuze body, and the nose cap. The fuze stock assembly is the after section of the fuze containing the firing pin and detents and the tracer cavity. The fuze body is threaded to the forward section of the fuze stock and contains the plunger, firing spring, sensitive and delay element primers, delay pellet and detonator. The nose cap is threaded to the forward end of the fuze body and contains the ball retainer unit, its detents and anti-creep spring.

Operation

The operation of the fuze is as follows: The fuze is assembled in the unarmed position and remains in this position during transportation, storage, and until after the fuzed projectile is fired from the gun. Shortly after the projectile leaves the muzzle of the gun, the firing pin detents and ball retainer detents are forced outward due to centrifugal force. The firing pin creeps forward during flight and is locked in the armed position by two steel balls which also creep forward and drop into the space left by the forward movement of the firing pin. Should the firing pin fail to creep forward during flight, it is projected forward and locked on impact. The ball retainer is lightly gripped by the ring of plunger locking balls which tend to spread radially as long as the firing spring exerts its force to pull the plunger to the rear, therefore the ball retainer does not creep forward during flight but tends to remain in the assembled position until impact. To insure further that the ball retainer will not creep forward, an anti-creep spring is interposed between the ball retainer and nose cap.

On impact, all parts tend to move forward with a force determined by the nature of the impact. The plunger compresses the firing spring and moves forward until stopped by the shoulder of the fuze body. At the same time, the ball retainer moves forward until stopped by the nose cap and is locked in this position by three ring segments engaging a shoulder at the end of the body. The plunger locking balls are released by this forward movement of the ball retainer and are projected forward into the cavity around the inside of the ball retainer. The detonator plunger remains in the forward position until the force of impact diminishes sufficiently to permit the

firing spring to propel the plunger to the rear, allowing the firing pin to stab and fire the sensitive primer, thus initiating the explosive action. With the plunger in the rear position, the plunger lead-out holes and the booster lead-in holes are brought into alignment and the fuze is completely armed. The plunger is locked in the rear position by three ring segments in a manner similar to the locking of the ball retainer.

On very light impact, when the force acting on the plunger is insufficient to compress the comparatively strong firing spring, the ball retainer acts as a trigger release by slipping forward out of the grip of the locking balls thus releasing the plunger. The firing spring then forces the plunger to the rear, allowing the firing pin to stab and fire the primer. When the sensitive primer is fired, the gas from it fires the percussion primer. The flash from the percussion primer passes thru and around the baffle and ignites the delay pellet which delays ignition of the detonator for 0.02 second. This detonator fires the plunger detonator and tetryl lead which in turn fires the plunger lead-outs, the booster lead-ins and the fuze boosters. Plunger alignment is maintained circumferentially by pins in the plunger stock, as shown. These pins hold the plunger lead-out and booster lead-in in axial alignment.

Arming Spin

Both the firing pin detents and ball retainer detents arm at from 1200 rpm to 1400 rpm.

Safety Features

Safety detent mechanisms are armed by centrifugal force only. One set of detents for the firing pin and one set for the ball retainer unit. The fuze is "detonator-safe" in the unarmed condition.

Sensitivity Limits

The Fuze Mk 23 in 8-in. AP projectiles will function at all probable striking velocities and obliquities against ½-in. mild steel plate. At the other end of the projectile scale in the 16-in. AP 2700-lb. projectile at 1500 f/s striking velocity, it requires a 1-in. STS plate at 20° obliquity to obtain consistent fuze action. When firing through successive light plates, each too thin to initiate fuze action individually, there is a cumulative effect which will cause fuze action of the Fuze Mk 23 in contrast to the Fuze Mk 21. The



Figure 18.—Base Detonating Fuze Mk 23 Exterior View Full Size

Fuze Mk 23 is less sensitive at 65° obliquity than is the Mk 21, but is more sensitive at 20°.

Acceptance Test Data

Samples from production lots are subjected to routine safety tests and to ballistic test as follows: Fuzes are tested by firing in projectiles of 8-in., 12-in., 14-in. and 16-in. caliber against steel plates of various thicknesses and at various angles of obliquity. Satisfactory functioning of the lot is demonstrated by high order detonation of 66⅔% of the projectiles at a distance of at least 30 feet but not more than 70 feet behind the plate.

Markings on Fuze

Around the exposed base of the fuze, the following data appear: T.D. Mk 23; Lot —; Inspector's initials; Name of manufacturer (N.G.F.); Year of manufacture.

Remarks

The Fuze Mk 23 is no longer in production, having been superseded by the Mk 21 type. This change was incorporated primarily because of rare prematures in flight which occurred with the Fuze Mk 23 in 8-in. AP projectiles. All Fuzes Mk 23 have been replaced at depots by the Fuze Mk 21 type.

The Fuze Mk 23 was an improvement of the earlier Fuze Mk 11 Mod 0 and Mod 8. This earlier fuze contained a tapered slider device which embedded itself more or less deeply into an annular delay pellet of black powder, depending on the amount of retardation the projectile received on impact. In this ingenious way, the Fuze Mk 11 design was intended to result in a variable delay depending on the impact. Thus, for heavy impacts where the remaining velocity is lower, a longer delay was advisable to allow the projectile to reach approximately the same distance behind the plate, simulating the armor of a ship, before detonation. For light impacts with higher remaining velocity, a shorter delay was advisable to cause a detonation at approximately the same distance behind the light initiating plate as would be the case with the heavy plate. This was theoretically achieved by the amount of penetration into the delay element attained by the tapered slider which caused more or less of the black powder of the annular delay element to be burned prior to initiating the detonator. Many Fuzes Mk 11 type were issued to service. However, after years of testing, it became increasingly apparent that although this design was theoretically desirable, its features could not be realized consistently in production fuzes. Erratic delays were obtained, especially on oblique impacts, and a serious number of duds were obtained. Accordingly, it was deemed advisable to change the design to a fixed delay (.02 second) fuze by removing the tapered slider arrangement and assigning a new Mark number.

The Fuzes Mk 23 and Mk 11 are novel in that they are a "plate-safe" design. That is, so long as the projectile is undergoing high retardation, the fuze will not fire because the strong plunger firing spring remains compressed by the inertia of the plunger. However, upon emerging from the rear face of a plate or obstruction, the retardation suddenly ceases and the firing spring drives the plunger and assembled primer cap to the rear onto the locked firing pin. When such a fuze (Mk 23 type) is fired into very thick plate or concrete which it cannot penetrate, the projectile has to come to nearly a complete rest before fuze action occurs. In contrast, a fixed delay fuze of the Mk 21 type will fire after the fixed time interval starting at first impact, whether the projectile is still retarding or not.

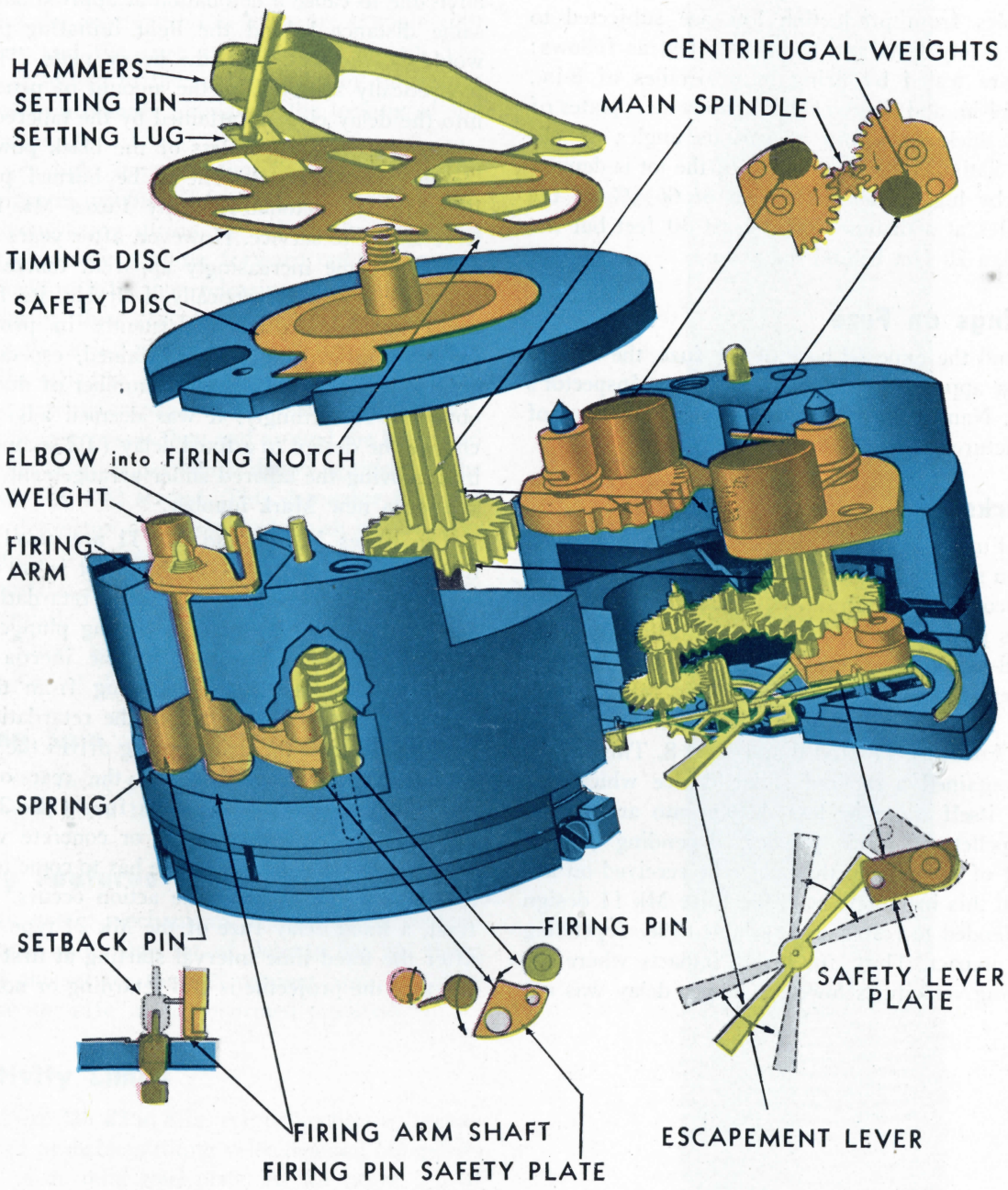

Figure 19.—Mechanical Time Fuze Mk 25—Exploded View

Chapter 10

MECHANICAL TIME FUZE MARK 25 MOD 1

General Data

Designation and Type

Mechanical Time Fuze Mk 25 Mod 1 (or subsequent)

Projectiles Used In

Illum.
- 5″/54 cal.
- 6″/47 (Double Purpose)

HC
- 5″/54 cal.
- 6″/47 (Double Purpose)

Overall Dimensions and Weight

Length	4.55 in.
Threaded length	0.47 in.
Body threads	1.70 in.—14NS-1RH
Weight	1.41 ± 0.035 lb.

Material

Body	Aluminum
Lower cap	Brass
Upper cap	Aluminum

Applicable OS and General Arrangement Drawing No.

(Not yet prepared). Use OS 2114, when pertinent.

Explosives Used

Primer cap contains either F.A. 70 primer mixture consisting of potassium chlorate, antimony sulfide, TNT and lead sulfocyanate or the F.A. 70 primer mixture modified to contain 8% ground glass. Magazine charge consists of not less than 40 grains of black powder in a moistureproof plastic container.

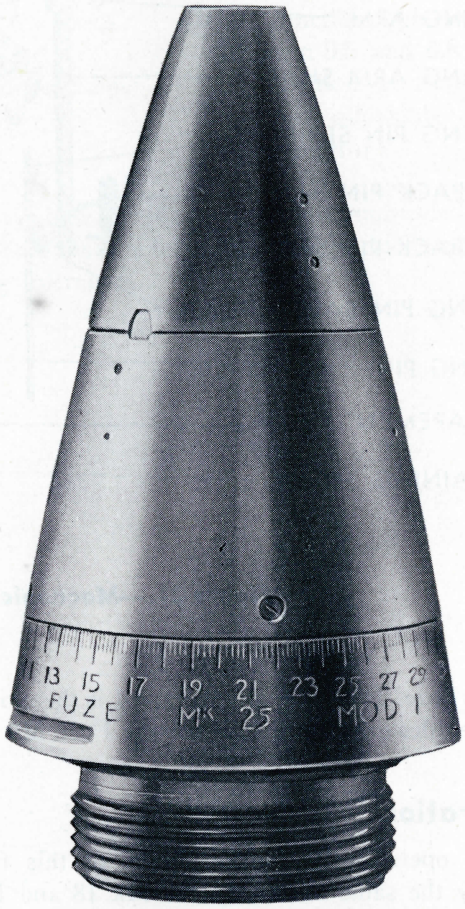

Figure 20.—Mechanical Time Fuze Mk 25 Mod 1 Exterior View Full Size

Description

The Fuze Mk 25 Mod 1 is a combination of the Mk 50 and the Mk 51. That is, it has the shape of the 30-second Fuze Mk 51 but contains the 45-second clockwork mechanism of the Mk 50. It is necessary to use the longer slimmer shape of the Fuze Mk 51 because of the longer more streamlined shape of the 5″/54 cal. and 6″/47 cal. (double purpose) projectiles with which it is used. However, these being relatively long range guns, they need the 45-second time element. Thus the description in this OP of the clockwork mechanism of the Fuze Mk 18 and Mk 50 is equally applicable to this fuze. Reference to the body, upper and lower caps of the Fuzes Mk 22 and Mk 51 are equally applicable

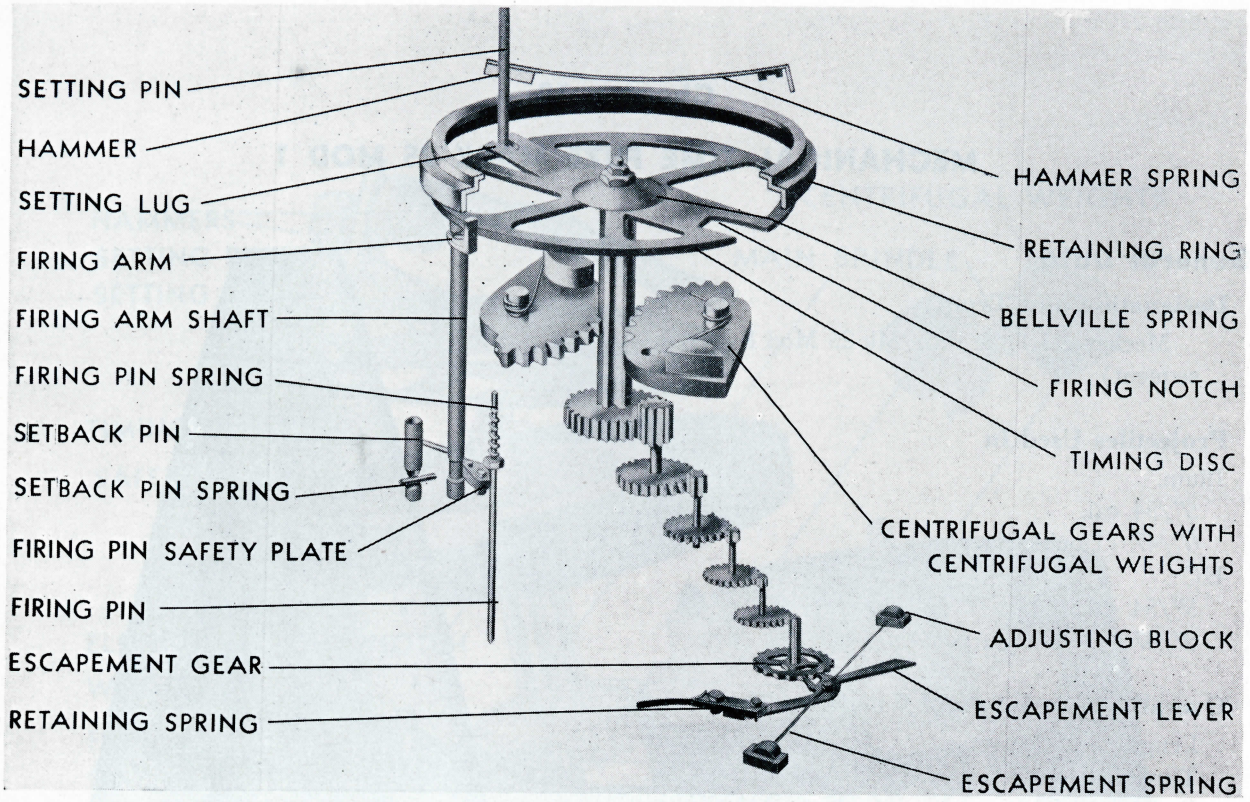

Figure 21.—Mechanical Time Fuze Mk 25—Schematic View

to this fuze. The Fuze Mk 25 Mod 1 is the moisture-proofed design as described for the Fuze Mk 51.

Operation

The operation of the clockwork of this fuze is exactly the same as that of the Mk 18 and Mk 50 type. The body and lower cap, being of the Mk 22 type, do not have protruding lugs for setting the fuze but have slots cut into them to engage the fuze setter lugs.

Safety Features

(a) A setback pin prevents rotation of the firing arm and hence tripping of the spring-loaded firing pin through a connecting linkage until the setback pin is moved rearward by setback force.

(b) A spring-loaded safety lever prevents oscillation of the clockwork escapement until the safety lever has been rotated out of engagement by centrifugal force.

(c) When the fuze is set on "safe" or anything less than the prescribed minimum setting, the firing slot in the timing disc is covered by a safety disc so that if the timing disc were rotated into firing position it could not release the firing arm and trip the firing pin.

(d) The timing disc is prevented from rotating by the setting pin which passes between two prongs of a raised forked lug near the edge of the timing disc itself. This lug is bent down out of the way of the setting pin by the hammer in the upper cap when setback occurs.

Acceptance Functioning Test

Sample fuzes from each production lot are fired at settings of 3, 10, 15, 20, 30, and 40 seconds at various gun elevations. The actual mean time of flight and the dispersion shall not differ from the setting by more than 0.08 seconds plus .005 times the setting.

Markings on Fuze

Mechanical Time Fuze Mk 25 Mod 1 (or subsequent). (Initials of Manufacturer and of Navy Inspector) Lot No. —.

Remarks

(a) Fuze Mk 25 Mod 1 is a moistureproofed design similar to that described for the Mk 51. There were never any non-moistureproofed Fuzes Mk 25 Mod 0 issued to service. All Fuzes Mk 25 Mod 0 and 1 are made by the Eclipse Machine Division of the Bendix Aviation Corp.

(b) **Time Setting Characteristics:** The Fuzes Mk 25 Mod 1 function as follows for various settings:

Setting	Action
Safety zone to and including 0.0 seconds	Dud caused by built-in feature (safety disc)
*0.0 to 0.3 seconds	May be a dud or may function somewhere between 0.6 and 0.8 sec.
*0.3 to 0.6 seconds	Will function somewhere between 0.6 and 0.8 sec.
0.6 to 45.0 seconds	Will function at time set (within allowable calibration error)

***NOTE:** These settings are not recommended because the resultant actions are variable, due to manufacturing tolerances.

655586—45——7

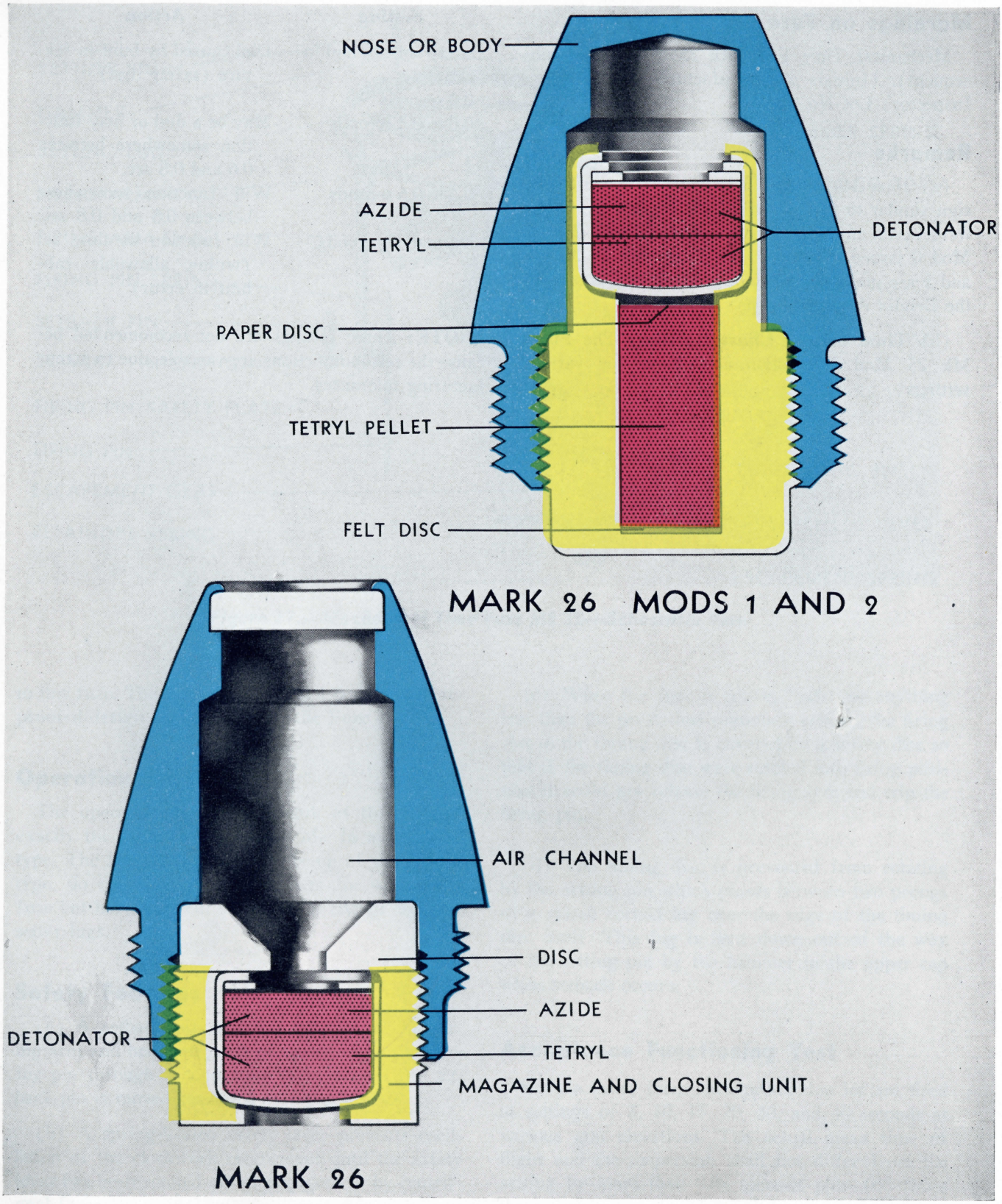

Figure 22.—Nose Detonating Fuze Mk 26—Sectional View

Chapter 11

NOSE DETONATING FUZE MARK 26

General Data

Designation and Type

Nose Detonating Fuze Mk 26 Mod —

Projectiles Used In

20-mm AA, HEI and HET

Overall Dimensions and Weight

Length ..... 1.015 in.
Body threads ..... 0.625 in.—36NS-2RH
Weight ..... Mod 0—244.67 grams
Mod 1—22.72 ± 0.57 grams
Mod 2—28.67 grams

Material

Mod 0 ..... All brass
Mod 1 .....Zinc body with solid nose and brass magazine
Mod 2 ..... All brass

Applicable OS 2347

General Arrangement Drawing No.

294296 for Mod 0
329208 for Mods 1 and 2

Explosives Used

Lead azide and tetryl are used in the detonator. The magazine inner cavity is loaded with tetryl, resting on a felt disc.

Description

The Fuze Mk 26 Mod 0 consists of five parts as follows:

1. Body
2. Closing disc (spun into the nose of the body)
3. Rear disc (forms open channel to detonator)
4. Detonator (lead azide and tetryl)
5. Magazine

The Fuzes Mk 26 Mods 1 and 2 (differing only in metal used) consist of four parts as follows:

1. Body (solid-nose type)
2. Detonator (lead azide and tetryl)
3. Magazine
4. Magazine charge (tetryl)

Operation

There are no moving parts in these fuzes. Thev are always armed. The action of the Fuze Mk 26 (no Mod) on impact is primarily a shock and perhaps—but secondarily—a compression action. Upon impact, the nose of the fuze undergoes a shocking force which causes a direct disturbing action on the detonator, initiating its explosion. The crushing of the nose and subsequent compression of the air column with generation of heat may help to initiate the explosion; however, this is a contributing factor and not the primary cause for fuze functioning. The detonator in the Fuze Mk 26 Mod 0 fires directly into the projectile charge, while in the Fuzes Mk 26 Mods 1 and 2 the detonator or pellet fires the additional (intermediate) magazine charge. In the Fuzes Mk 26 Mods 1 and 2, the action on impact is the force from shock acting upon the detonator. The detonator is broken up by the shock and sprays forward; the disturbance initiating its explosion

Arming Spin

None required—there are no moving parts.

Safety Features

The fuze has no safety features in its design as such. However, it will withstand a 40-foot drop onto armor plate without detonation in an assembled round.

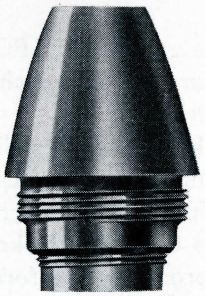

Figure 23.—Nose Detonating Fuze Mk 26 Exterior View Full Size

Sensitivity Limits

The Fuze Mk 26 Mod 1 will function consistently on ⅛-in. mild steel plate at 0-degree obliquity and 1250 f/s striking velocity, corresponding to about 950 yards range. As the obliquity changes and/or the striking velocity decreases, the number of duds increases. This can best be illustrated by quoting from an NPG report of 23 Sept. 1943, wherein the sensitivity was being measured.

Rounds	Velocity	Obliquity	Target	% Functioning H.O.
10	1250 f/s	0	⅛" m.s.	100
5	1250 f/s	40	⅛" m.s.	80
5	1250 f/s	70	⅛" m.s.	60
10	1100 f/s	0	⅛" m.s.	100
5	1100 f/s	40	⅛" m.s.	100
5	1100 f/s	70	⅛" m.s.	40
10	950 f/s	0	⅛" m.s.	100
5	950 f/s	40	⅛" m.s.	60
5	950 f/s	70	⅛" m.s.	0
10	800 f/s	0	⅛" m.s.	90
5	800 f/s	40	⅛" m.s.	20
5	800 f/s	70	⅛" m.s.	0
5	1250 f/s	0	0.063" m.s.	100
5	1250 f/s	40	0.063" m.s.	20
5	1100 f/s	0	0.063" m.s.	80
5	1100 f/s	40	0.063" m.s.	0
5	950 f/s	0	0.063" m.s.	80
5	800 f/s	0	0.063" m.s.	0
5	1250 f/s	0	0.102" dural	20
5	1250 f/s	0	0.125" dural	60
5	1100 f/s	0	0.125" dural	40
2	1100 f/s	0	0.137" dural	100
2	950 f/s	0	0.125" dural	50
2	950 f/s	0	0.137" dural	100
2	800 f/s	0	0.125" dural	0
4	800 f/s	0	0.137" dural	50
2	800 f/s	0	0.156" dural	100

Extracts from another NPG report of 27 February, 1943, are quoted which pertain to sensitivity at higher velocities.

"The Fuze Mk 26 Mod 1 will function on the first ⅛-in. aluminum plate at 1350 f/s after penetrating, without fuze action occurring, dural plating from 0.013 in. to 0.103 in. thickness. This is considered a very promising performance, since this range of dural should include the greater proportion of aircraft outer plating to be encountered, and further, it indicates that the higher striking velocities, which may result from shorter ranges, will not cause the fuze to detonate on the medium thickness of outer plating.

"The Fuze Mk 26 Mod 1 at 1250 f/s will penetrate the successive plates and detonate on the first ⅛-in. aluminum plate encountered. This location of fuze action, that is on the first wall of the gasoline tank, is believed to be the optimum performance, since conflagration is considered most probable, using HEI loaded projectiles, with fuze action occurring on the entrance well."

Acceptance Test Data

Functioning Test—Fuzes assembled in live-loaded 20-mm AA projectiles are fired against ⅛-in. mild plate at 0-degree obliquity and 1250 f/s striking velocity. Failure of the fuze to detonate high order on the plate constitutes a failure. Results of firing test are evaluated in terms of the following table:

No. of failures found	Reject lot if this No. or fewer tested	Indeterminate: keep testing	Accept lot if this No. or more tested
0	X	0- 9	10
1	X	1-19	20
2	X	2-29	30
3	10	11-35	36
4	20	21-39	40
5	40	....	..

Procedure in use of this table is as follows: The test is started, and the number of failures and number tested are recorded. If there are no failures in the first 10, the test is stopped and the lot accepted. Similarly, if one failure in first 20, or two in first 30, the lot is accepted. However, if there are three failures in the first 10, or four failures in the first 20, etc., the lot is rejected. When number tested for number of failures falls in the indeterminate zone, the test is continued until the lot is rejected or accepted.

For every tenth lot, fuzes are assembled in live-loaded 20-mm AA projectiles and fired against a 0.012-in. plate placed 2 ft. in front of a ⅛-in. mild steel plate at 0-degree obliquity and 1250 f/s striking velocity. Functioning on the 0.012-in. or failure to function on the ⅛-in. mild steel plate shall constitute a failure. Results of this test are evaluated in terms of the above table. If a lot is rejected on this test, every subsequent lot is subjected to this double plate test until 20 consecutive lots have been accepted.

Markings on Fuzes

Mk 26-1 (or 2); Manufacturer's Initials; Lot Number (word "lot" is omitted); Loading Plant Initials or Symbols; Month and Year of Loading.

Remarks

The Fuze Mk 26 Mod 1 is by far the most common type now in service. In September, 1944, this was the only design under manufacture.

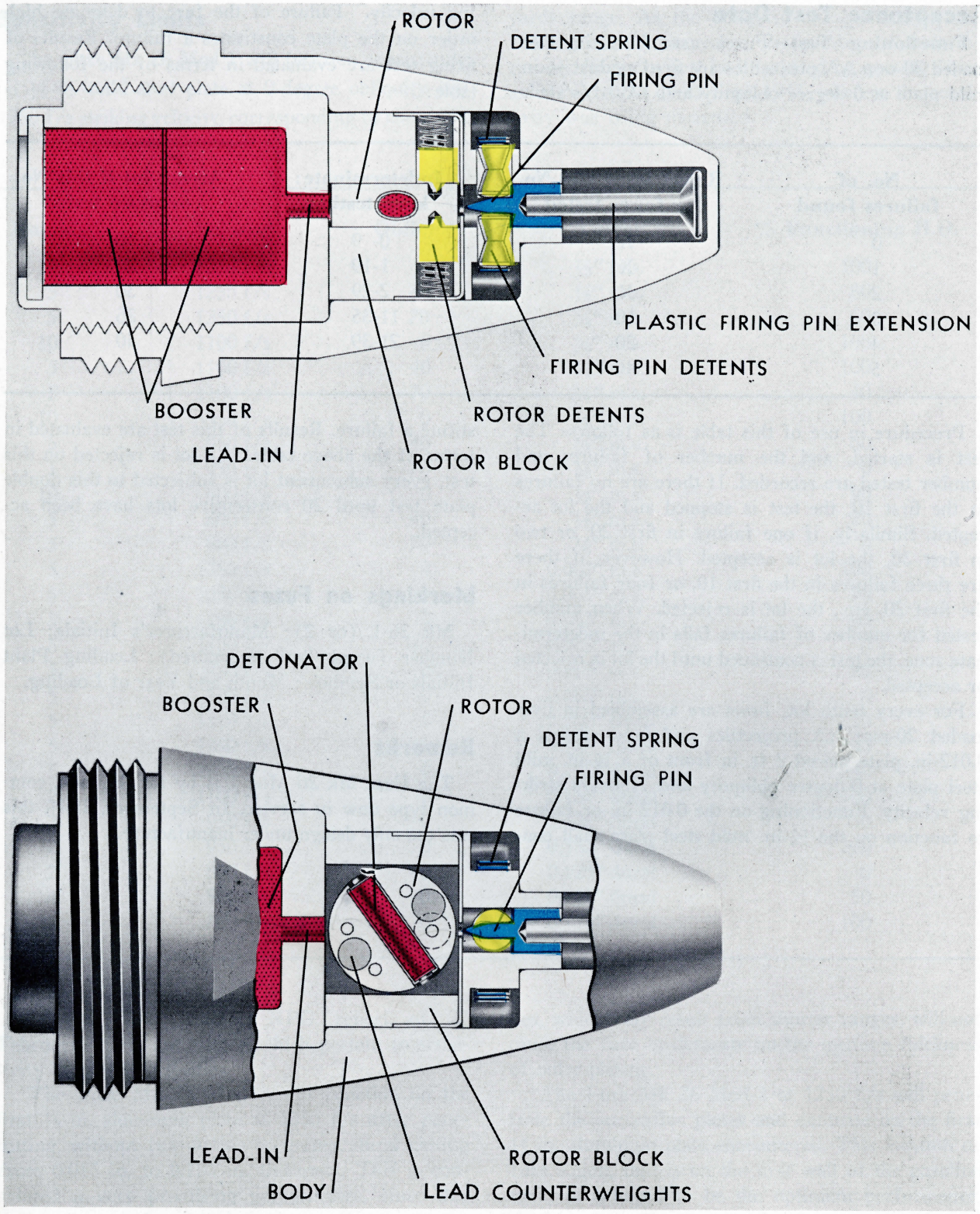

Figure 24.—Point Detonating Fuze Mk 27—Sectional View

Chapter 12

POINT DETONATING FUZE MARK 27

General Data

Designation and Type

Point Detonating Fuze Mk 27 Mod —

Projectiles Used In

40-mm AA

Overall Dimensions and Weight

Length ..... 2.445 in.
Body threads ..... 1.18-in.—14NS-2RH
Weight ..... 104 ± 2.6 grams

Material

Body ..... Aluminum die cast
Magazine ..... Steel or brass
Rotor block ..... Aluminum
Rotor ..... Aluminum
Firing pin holder ..... Die cast zinc

Applicable OS 2958

General Arrangement Drawing No. .. 300423

Explosives Used

Lead azide primer mix and lead azide used in detonator; tetryl in booster

Description

The fuze is composed of four major parts; namely, the **fuze body,** the **magazine,** the **firing pin holder,** and the **rotor block assemblies.** The forward section of the fuze body contains the plastic firing pin extension or hammer, the stab-type firing pin, detents and spring contained in the firing pin holder assembly, and the rotor block with rotor, detents, springs, and rotor cover. The magazine is screwed into the after end of the body. The fuze is designed:

(1) To detonate the projectile explosive charge and thereby burst the projectile with high-order detonation instantaneously upon impact with material of appreciable resistance.

(2) To insure safety and to prevent detonation of the projectile when fired in a gun or in normal flight until detonated by impact.

(3) Not to function or detonate when assembled in a projectile and dropped nose-, side-, or base-down from a height of 40 feet onto armor plate.

Operation

The fuze is assembled in an unarmed condition and remains so during transportation and storage. When fired from a gun, centrifugal force moves the detents of both firing pin and rotor outward against their spring pressures and friction, releasing the rotor and firing pin. The rotor, complete with lead counterweights and detonator, is assembled in the rotor block with the axis of the detonator at an angle of about 55 degrees from the long axis of the fuze. The line of center of the lead counterweights, being perpendicular to the axis of the detonator, is at an angle of about 35 degrees from the long axis of the fuze. The rotor is held in the unarmed position by the two rotor detents, the tapered ends of which engage in the holes in the sides of the rotor. In this position, the detonating element is safe, and if the detonator were to be exploded in this position, it would not detonate the booster.

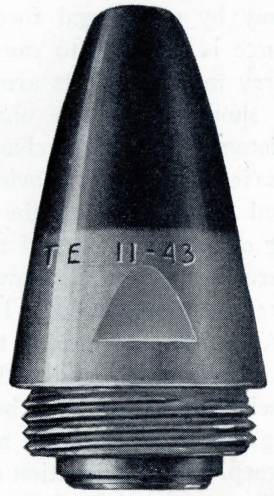

Figure 25.—Point Detonating Fuze Mk 27 Exterior View Full Size

The rotor detents on being moved outward by centrifugal force withdraw from the holes in the rotor, permitting the counterweights to rotate the rotor until the detonator is in line with the booster lead-in and firing pin, respectively. In this position, the rotor is dynamically balanced with respect to the axis of the fuze. Centrifugal force holds the two lead filled holes at a maximum radius from the axis of rotation of the fuze. The rotor is now fully armed. Since the firing pin detents are now released, arming is complete.

Upon impact with any object offering material resistance to penetration, such as wings or the fuselage of airplanes, etc., the nose of the fuze receives a sharp blow causing the plastic hammer to propel the firing pin. The firing pin stabs and fires the detonator, threby initiating the explosive train of the booster lead-in, booster, and projectile explosive filler which bursts the projectile.

Arming Spin

The firing pin detents arm at from 7000 to 14,000 rpm for Mod 0 and 7000 to 20,000 for the Mod 1. The rotor detents and hence the rotor arms at from 10,000 to 14,000 rpm in static tests.

Safety Features

The rotor assembly and firing pin are each held in the unarmed position by means of safety detents which arm only by centrifugal force. In addition, centrifugal force is required to cause the counterweights to carry the rotor to its armed position. If the detonator should fire in the unarmed position, it would not detonate the booster charge. In the Mod 1, an added safety feature is provided by the differently shaped detents holding the firing pin. Instead of being cylindrical pieces of metal, these detents are tapered from each end toward the center and roughly resemble hourglasses. They are known as "hourglass" detents. On setback the shoulder on the firing pin moves back against the detents and, because of their shape, they will be held in place until the firing pin moves forward again under the influence of creep. This modification makes the Fuze Mk 27 Mod 1 more consistently bore-safe by preventing release of the firing pin in the bore of the gun.

Sensitivity Limits

This fuze will function on the following materials and at the following obliquities:

(a) Will function on sand or soft earth at angles up to and including 87 degrees. (b) Functions on heavy plate (8-in. Class B) at 30, 60, and 70 degrees obliquity. At 70 and 80 degrees the fuze will not function. (c) No fuze actions were obtained on newsprint at any velocity or obliquity. (d) Functions on 0.029-in. chipboard at service velocity and 0 degrees obliquity. At 45 degrees and service velocity it will function on 0.058-in. chipboard. (e) Fuze action will occur against water occasionally when fired at 40 degrees (60-degree angle of fall) and 60 degrees elevation (70-degree angle of fall). (f) the fuze has 90% functioning at velocities above 2000 f/s. on 0.016-in. duraluminum.

Acceptance Test Data

Sensitivity and Functioning Tests—Functioning tests are conducted by firing fuzes assembled in loaded projectiles against 0.138-in. thick chipboard at a distance of 100 to 400 feet from the gun and at service velocity and 0 degrees obliquity. Acceptance is based on the criterion that there must be no more than 1% failure in test fuzes from a certain lot. Acceptable functionings are high order detonations.

Fifty fuzes from each lot are fired as specified in the above paragraph. The lot is considered satisfactory if the sample of 50 has no more than two failures. If there are three or more failures out of the fifty, the lot is rejected. If ten consecutive lots pass this test and if there are no more than five failures in the total 500 fuzes tested, only ten fuzes from each subsequent lot are tested.

On reduced sampling, the lot is considered satisfactory if there is no more than one failure in the sample of ten fuzes. The lot is rejected if there are three or more failures. If two failures occur in a sample of ten, a second sample of 40 fuzes from that lot is tested. The lot is satisfactory if there are no more than a total of two failures in test and retest.

On reduced sampling, if a lot fails to pass the test outlined above, or if a group of 10 consecutive lots have more than three failures in the total of 100 fuzes tested, subsequent tests are in accordance with the procedure using samples of 50 fuzes from a lot.

The occurrence of a premature attributable to a fuze shall cause rejection of the lot.

Markings on Fuze

Mark 27 (Mod No.); Lot —; Loading Plant, Initials or Symbol; Month and Year of Loading.

Remarks

The Fuze Mk 27 Mod 1 utilizes firing pin detents of a shape known as "hourglass" detents. This type of detent is more bore safe than the earlier cylindrical type for reasons outlined under SAFETY FEATURES for this Mark fuze.

655586—45——8

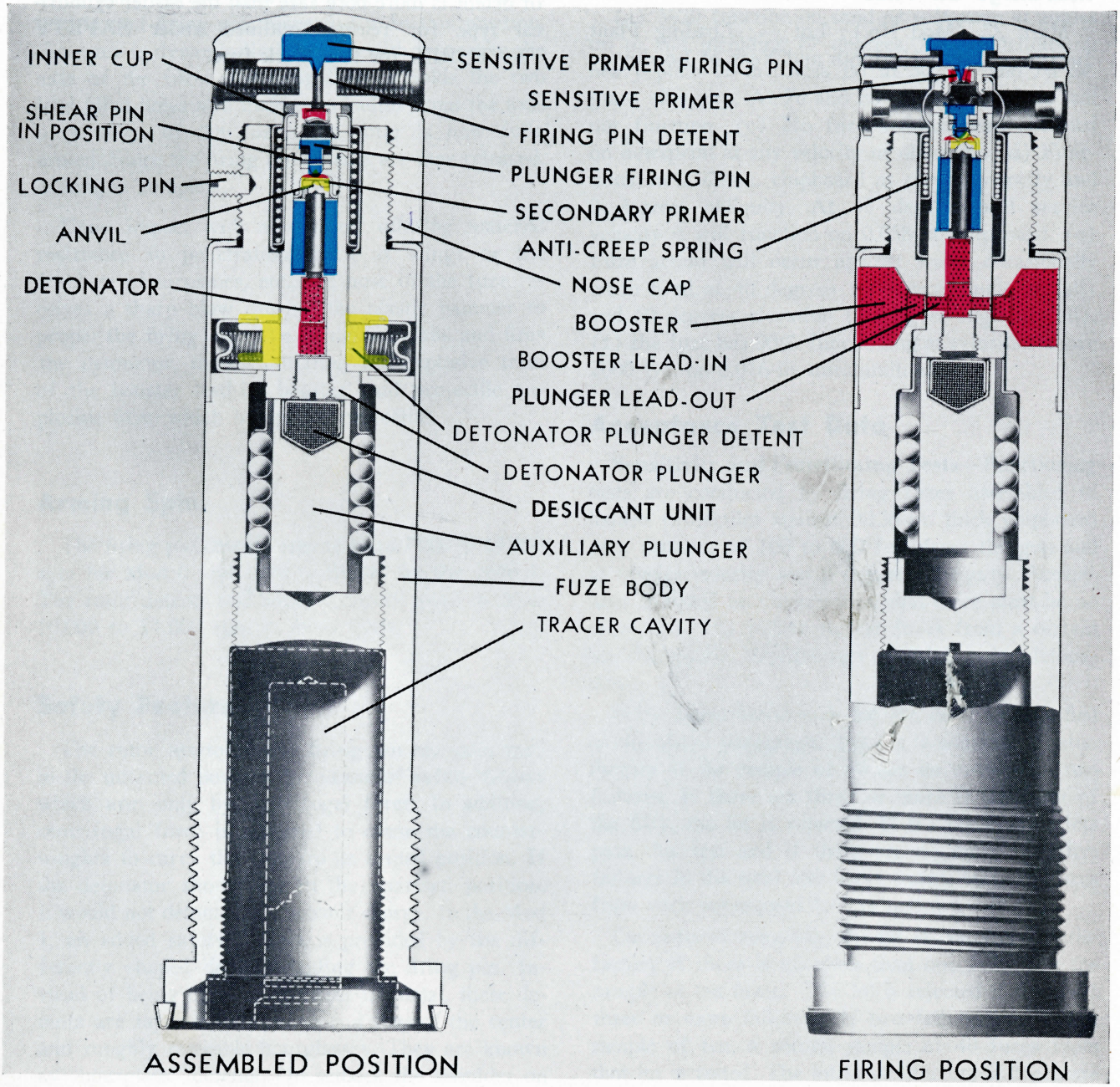

Figure 26.—Base Detonating Fuze Mk 28—Sectional View

Chapter 13

BASE DETONATING FUZE MARK 28

General Data

Designation and Type

Base Detonating Fuze Mk 28 Mod —.

Projectiles Used In

AA COMMON	HC
5″/25 cal.	4″/50 cal.
5″/38 cal.	(Temporary assembly;
5″/54 cal.	Fuze Mk 31 type
(Same as HC	now used)
Projectile)	5″/51 cal.
	6″/47 cal.
COMMON	6″/53 cal.
6″/50	8″/55 cal. (Temporary;
6″/47	Mk 39 then used;
(For 6″/47	Mk 48 now used)
bag guns)	
7″/45	

Overall Dimensions and Weight

Length ..... 6.68 in.
Body thread length ..... 1.09 in.
Body threads ..... 1½-in.—12NF-3L.H.
Weight ..... 1.86 ± 0.05 lb.

Material

Body ..... Pearlitic manganese steel
Detonator plunger .. Pearlitic manganese steel
Nose cap ..... Aluminum alloy

Applicable OS 2484

General Arrangement Drawing No. .. 330167

Explosives Used

1 Sensitive primer cap—Fulminate of mercury cap mixture (includes potassium chlorate and antimony sulphide)
1 Relay primer cap—Fulminate of mercury cap mixture (includes potassium chlorate and antimony sulphide)
1 Detonator—Lead azide
1 Detonator plunger load—Tetryl
2 Plunger lead-outs—Tetryl
2 Booster lead-ins—Tetryl
2 Boosters—Tetryl

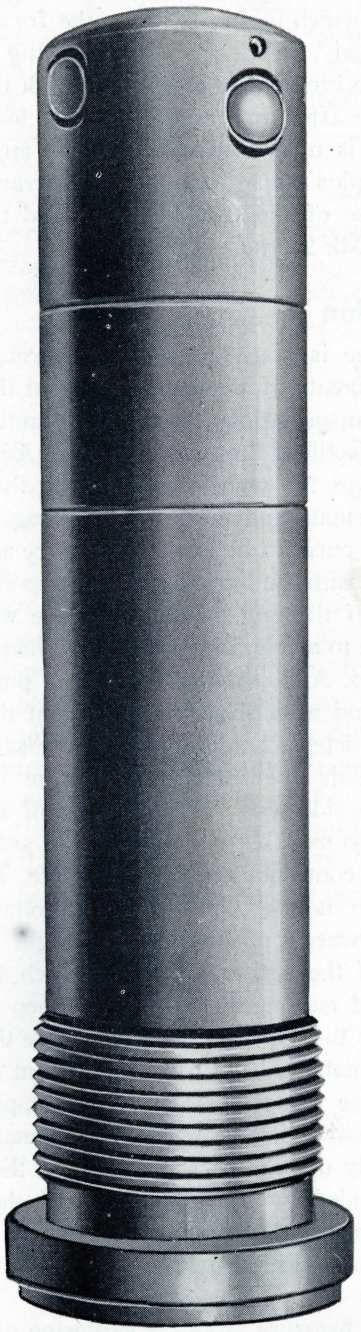

Figure 27.—Base Detonating Fuze Mk 28 Exterior View Full Size

Description

The fuze is composed of two major parts, namely, the fuze body and the nose cap. The fuze body contains the plunger retaining plug, the auxiliary plunger assembly, the detonator plunger assembly, detents, anti-creep spring assembly and two sidewall boosters protected by a booster cover. The nose cap, which is screwed onto the forward end of the fuze body, houses the sensitive firing pin and detents. A locking pin is provided to lock the nose cap in position after final assembly at the loading plant. The fuze is moistureproofed by the application of a lacquer plus a final coat of Bakelite varnish.

The base of the fuze body is fitted to receive a tracer of Mk 9 type.

Operation

The fuze is assembled in the unarmed position. All components of the fuze remain in this position during transportation, storage, and until after the fuzed projectile is fired from the gun. After the projectile leaves the muzzle of the gun, the detonator plunger detents and the sensitive firing pin detents are forced outward by centrifugal force against their spring pressure and friction. This does not occur in the bore of the gun, because the side wall friction forces due to acceleration are greater than the centrifugal forces. Also, the sensitive firing pin is slightly movable and at set-back binds against the sensitive firing pin detents holding them in the safe position. Close outside the muzzle where the acceleration ceases, the side wall friction drops off sharply and the radially movable parts (detents) snap outward due to the continuous centrifugal force. The detonator plunger is now unlocked but is retained in the safe (rearward) position during flight by the resistance of the anti-creep spring which acts against the flanged end of the inner anti-creep spring cup attached to the detonator plunger. Since the sensitive firing pin detents have been thrown out of the way the sensitive firing pin is free to be impinged upon by the sensitive primer held in the detonator plunger immediately upon impact. At this time the detonator plunger, aided by the momentum of the auxiliary plunger on its ball bearings, continues forward, impinging the sensitive primer cap onto the sensitive firing pin.

The gas pressure from the explosion of the sensitive primer cap drives the round pointed delay element firing pin against the delay primer cap while at the same time these gases pass through the port holes on the side of the primer container and build up a high pressure within the inner cup for anti-creep spring, expanding that part of the cup which is adjacent to the drilled holes in the nose cap. The bulging of the inner cup for the anti-creep spring locks the detonator plunger in the forward firing position. In this firing position the lead-out holes in the plunger are in alignment with the booster lead-in holes. The firing of the detonator plunger delay primer cap in turn functions the detonator, two plunger lead-outs, two booster lead-ins, two boosters, and projectile bursting charge.

In this fuze there appears to be no obvious need for the delay primer cap and efforts are being made to eliminate it. It is present in this fuze because the Fuze Mk 28 is an adaptation of the Base Detonating Delay Fuze Mk 20 wherein the delay primer cap serves the specific purpose of igniting the delay element, and maintaining a satisfactory pressure within the plunger during the delay burn-through time.

Arming Spin

Fuze is armed shortly after leaving the muzzle. Detents are required to arm in static spin tests between 3000 and 4500 rpm.

Safety Features

The safety detent mechanisms are armed only by centrifugal force of a relatively high magnitude. Two sets of detents, one to prevent the sensitive primer from impinging on the sensitive firing pin, and the other set for holding the detonator plunger in the safe rearward position, insure that all four detents will not become accidentally withdrawn at the same time. Furthermore, the fuze is "detonator safe." That is, when the fuze is in the safe position (plunger rearward), and the detonator is set off by any cause, the force of the detonator is dissipated and the boosters will not be detonated.

Sensitivity Limits

The Fuze Mk 28 and Mods will function at all probable velocities and obliquities up to 80° against ¼-in. m.s. plate in 5-in. projectiles. It will function reliably on ground and water impacts down to angles of fall about 2° and 5°, respectively.

Acceptance Test Data

Samples from each production lot of fuzes are subjected to the prescribed safety tests and also to the following ballistic acceptance tests:

Caliber	Lots	Rounds	Plate	Angle of Obliquity	Striking Velocity
5″/38	All but every 5th	5	¼″ Mild steel	0°	2000 f/s or serv. vel.
5″/38	All but every 5th	5	¼″ Mild steel	45°	1000 f/s or 1200 f/s
5″/25	All but every 5th	5	¼″ Mild steel	0°	2500 f/s
5″/25	All but every 5th	5	¼″ Mild steel	45°	1400 f/s

Acceptance of each lot is based on at least 80% performance of fuzes causing projectiles to burst high order in the plate or not more than fifteen feet back of the plate.

Markings on Fuze

Around the exposed base of the fuze body, the following data are stamped on each fuze: Mk 28 Mod — Lot —; Loading Plant's Initials; Year and Month of Loading; Inspector's Initials; Anchor Sign; Inert Part Manufacturer's Initials.

Remarks

(a) The Fuze Mk 28 is very similar to Fuze Mks 19, 20, 21, 39, and 48. It has no black powder delay element as do all the others except the Mk 39. It has a slight inherent mechanical delay peculiar to all plunger-type base fuzes. This delay is on the order of 0.003 second.

(b) The different modifications of the Fuze Mk 28 earlier than Mod 15 represented primarily different commercial manufacturers of inert parts. This practice has been discontinued, and the same Mod number 15 applies to all commercial manufacturers, since adequate identification is taken care of by the fuze marking described above. The Fuze Mk 28 Mod 16 is the moistureproofed design which is loaded by the Naval Torpedo Station, Newport. At present very few (eight lots) of Fuzes Mk 28 Mod 16 have been produced and none have been varnish coated. Since some dimensions and tolerance are slightly different from those of Fuzes Mk 28 Mod 15, another Mod No. (16) was assigned.

(c) Fuze Mk 28 Mod 15 and later modifications are moistureproofed for preservation purposes. Moistureproofing is augmented by insertion of a small silica gel desiccating unit in the forward end of the auxiliary plunger to remove moisture from the air entrapped in the fuze at assembly. The fuze is coated externally at assembly at all possible points of moisture entry with a lacquer followed by an application of the same Bakelite varnish used on Mechanical Time Fuzes Mk 50 and 51. These films act effectively as a mechanical barrier to the passage of moisture.

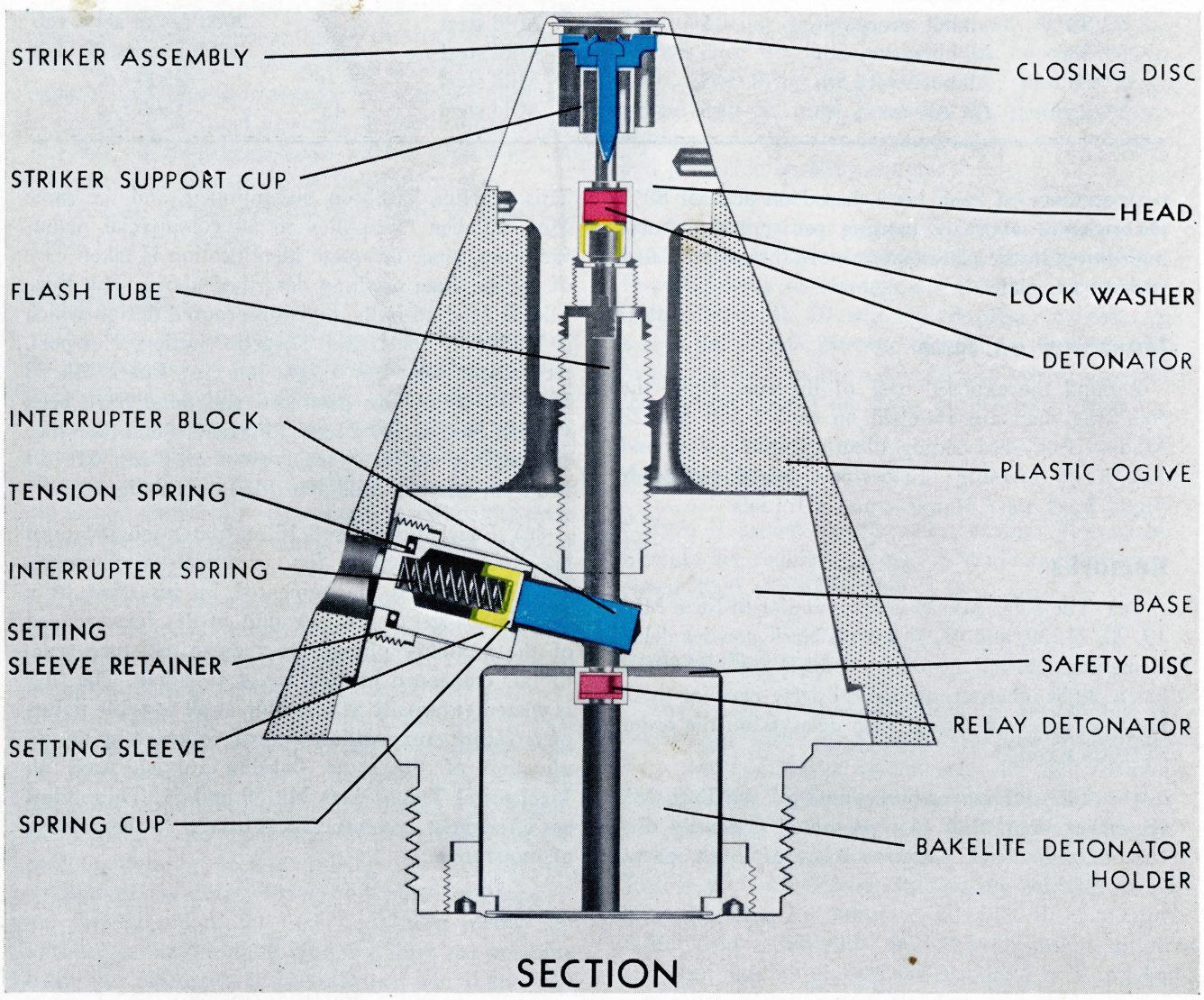

Figure 28.—Point Detonating Fuze Mk 29—Sectional View

Chapter 14

POINT DETONATING FUZE MARK 29

General Data

Designation and Type

Point Detonating Fuze Mk 29 Mod —

Projectiles Used In

HC	AA Common	WP
5″/51 cal.	(Used as HC)	*5″/38 cal.
6″/47 (S.P.)	5″/25 cal.	
6″/53	5″/38 cal.	
8″/55		
12″/50		
14″/45		
14″/50		
16″/45		
16″/50		

* Uses Mod 3 only.

Overall Dimensions and Weight

Overall length ..... 4.14 in.
Thread ..... 1.70-in.—14NS-1RH
Weight ..... 1.45 ± 0.04 lb.

Material

Body ..... Steel
Nose piece ..... Brass
Ogive ..... Plastic (cloth base)
Flash tube ..... Steel
Relay detonator holder ..... Plastic

Applicable OS 3303
3013 & 4541 (Plastic ogive)

General Arrangement Drawing No.

422325 (Mod 3)
328557 (Mods 1 & 2)

Explosives Used

Nose Detonator—Azide primer cap mixture and lead azide (compound detonator)
Relay Detonator—Lead azide

Description

The fuze consists of five principal parts:

(1) **The steel body** which contains the relay detonator, a plastic holder for the relay detonator, the interrupter unit, and a base closing plug or screw.

(2) **The brass nose or detonator assembly** which contains the striker assembly and the upper detonator.

(3) **The plastic ogive**—In the Mods 1, 2 and 3, this ogive consists of a roll of creped cloth impregnated with a special resin under high pressure and temperature conditions into the desired shape. The Mod 4 is similar but uses uncreped cloth. The original Mod 0 ogive was an asbestos fiber bonded plastic, a brittle type which chipped and shattered on impacts. The cloth types, on impacts due to rough

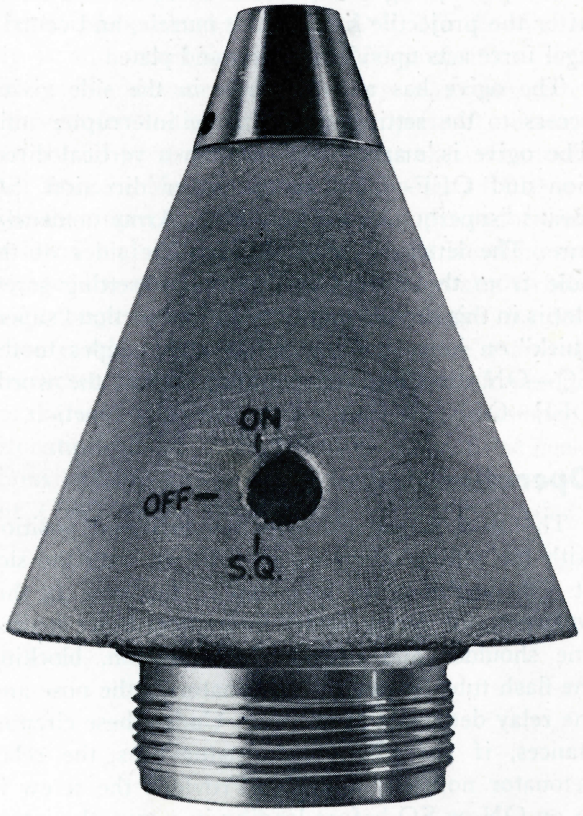

Figure 29.—Point Detonating Fuze Mk 29 Exterior View Full Size

handling, do not result in separate small fragments which could easily cause breech jams, as was the case with Fuze Mk 29 Mod 0.

(4) **A steel flash tube** which is fitted in the center of the ogive and screws into the nose and base, holding them together.

(5) **The interrupter unit**—This unit consists of a solid cylindrical piece of metal (interrupter), a setting screw and integral forked sleeve, a plate or metal block fitted between the shoulders of the forked portion, and an interrupter spring bearing against the plate and base of the fork. In the OFF position, the interrupter is arranged so that it is bearing against only one shoulder of the forked sleeve. This is possible since the adapter hole for the interrupter has been drilled off-center with respect to the center of axis of the forked sleeve and setting screw. In the SQ—ON position the forked sleeve is rotated 90 degrees, the interrupter bears against neither shoulder, but instead, the metal plate between the shoulders. The plate bears against the interrupter spring and is free to move into the sleeve after the projectile has left the muzzle, and centrifugal force acts upon interrupter and plate.

The ogive has a drilled hole in the side giving access to the setting screw in the interrupter unit. The ogive is marked SQ—ON in a vertical direction and OFF—OFF in the other direction. SQ means "superquick" which is U. S. Army nomenclature. The letters SQ are on opposite sides of the hole from the word ON. When the setting screw slot is in this direction, the fuze will function "superquick" on impact. When set at right angles to the SQ—ON direction and pointing toward the words OFF—OFF, the fuze will not normally function.

Operation

The fuze is assembled in the unarmed position with the setting screw set on OFF or with the slot at right angles to the long axis of the fuze. In this condition, the spring-loaded interrupter bears against one shoulder and is locked in position, blocking the flash tube between the detonator in the nose and the relay detonator in the base. Under these circumstances, if the forward detonator fires, the relay detonator normally will not. Provided the screw is se on ON or SQ before loading in a gun, the interrupter can be acted upon by centrifugal force against the action of its spring and moves up into the forked sleeve, unblocking the flash tube. This action takes place after the projectile has left the muzzle of the gun. Since the firing pin is held in position only by a support cup, the fuze is fully armed as soon as the flash tube is clear. On impact, the firing pin support collapses and the firing pin is driven into the detonator. The flash from the upper detonator passes down the flash tube and initiates the relay detonator, which in turn causes the auxiliary detonating fuze to function and explode the projectile burster charge; or, as in the case of WP projectiles, functioning of the relay detonator ignites the black powder charge in the projectile. The Mod 3 is the only Mod authorized for use in the WP projectile.

Arming Spin

The interrupter arms the fuze at 1500 to 2000 rpm in static spin tests.

Safety Features

There is only one primary safety feature: the interrupter described above. An aluminum disc over the plastic relay detonator holder in the Mod 3 gives added protection to the relay detonator in case the nose detonator is accidentally fired while the interrupter is in the OFF position.

Sensitivity Limits

The fuze will detonate on ½-in. wood, on water or ground impacts at nonricochet angles and even on cork fragments from cartridge cases in case of direct hits. In the case of ground impacts, functioning is limited to an angle of fall of eight degrees; and for water impacts, the angle of fall is limited to 12 degrees. Care should be taken not to fire into any part of the firing ship's structure with this fuze, including antennae wires, halyards, etc.

Acceptance Tests

Sample fuzes, chosen at random from each production lot, are subjected to routine safety tests and to the following ballistic tests:

Ballistic Tests—Fuzes are assembled in high capacity projectiles loaded with explosive "D" and containing auxiliary detonating fuzes. Base holes in all test projectiles are plugged and gas checked.

Caliber	Obliquity	Velocity	Rounds	Material	Range
5″/25	0	2175	2	1″ wood	400′
5″/25	0	1200	2	1″ wood	400′
5″/38	0	2600	2	1″ wood	400′
5″/38	0	1400	2	1″ wood	400′
5″/51	0	3150	2	1″ wood	400′
5″/51	0	1600	2	1″ wood	400′
*5″/25 to 16″/50 at proof or near proof			8	Water	Various

* This firing can be included in ranging programs or acceptance tests of other items, but larger calibers are to be used as much as practicable. Gun elevations must exceed eight degrees, and at least two fuzes from each lot shall be fired at proof or near proof, preferably in a 5-in. gun.

For every twentieth lot, there are substituted for water impacts the following soft ground impacts:

2 rounds in 5″/25
2 rounds in 5″/38
4 rounds in 6″/47 to 16″/50

Angles of fall and striking velocities are chosen so as to duplicate as nearly as possible short- and long-range bombardment by the same type guns in service. Out of every lot tested, two duds and no prematures are tolerated. For every twentieth lot, ⅛-in. mild steel is substituted for 1-in. wood.

Markings on Fuze

The plastic ogive is stamped with the following data: P.D.F. Mk 29 Mod —; Manufacturer's Initials; Lot —; Loading Plant Initials; Month and Year of Loading; Anchor Sign; Inspector's Initials. The following markings are found also on the plastic ogive: ON—SQ and OFF—OFF in the Mod 3, and SQ—ON and OFF in the Mods 1 and 2. These markings are at right angles to each other and are spaced around the hole for the setting screw. ON—SQ, run vertically, and the other markings run horizontally.

Remarks

This fuze is an adaptation of the Army point detonating Fuze M48 without the delay element inertia plunger present in the latter. This Army fuze has a metal ogive, which had to be replaced because a different shaped fuze was necessary for Naval projectiles. This fuze is very similar to the Fuze Mk 30 and Mods, except for its external shape.

It should be noted that the P.D.F. Mk 29 Mod 3 only is authorized for use in WP projectiles. Because of the absence of an auxiliary detonating fuze in this projectile the safest possible point detonating fuze should be used. The Mod 3 is relatively much safer than the Mod 2 because it embodies a 0.010-in. thick aluminum disc between the relay detonator and the lower end of the flash tube. If, in handling or stowage, the nose of the fuze is accidentally struck hard enough to set off the upper detonator, its gas pressure, which occasionally leaks past the unarmed interrupter, would have to puncture the aluminum disc before it could set off the relay detonator. Detonation of the lower detonator under these conditions can be expected to occur less than one percent (1%) of the time with Fuze Mk 29 Mod 3.

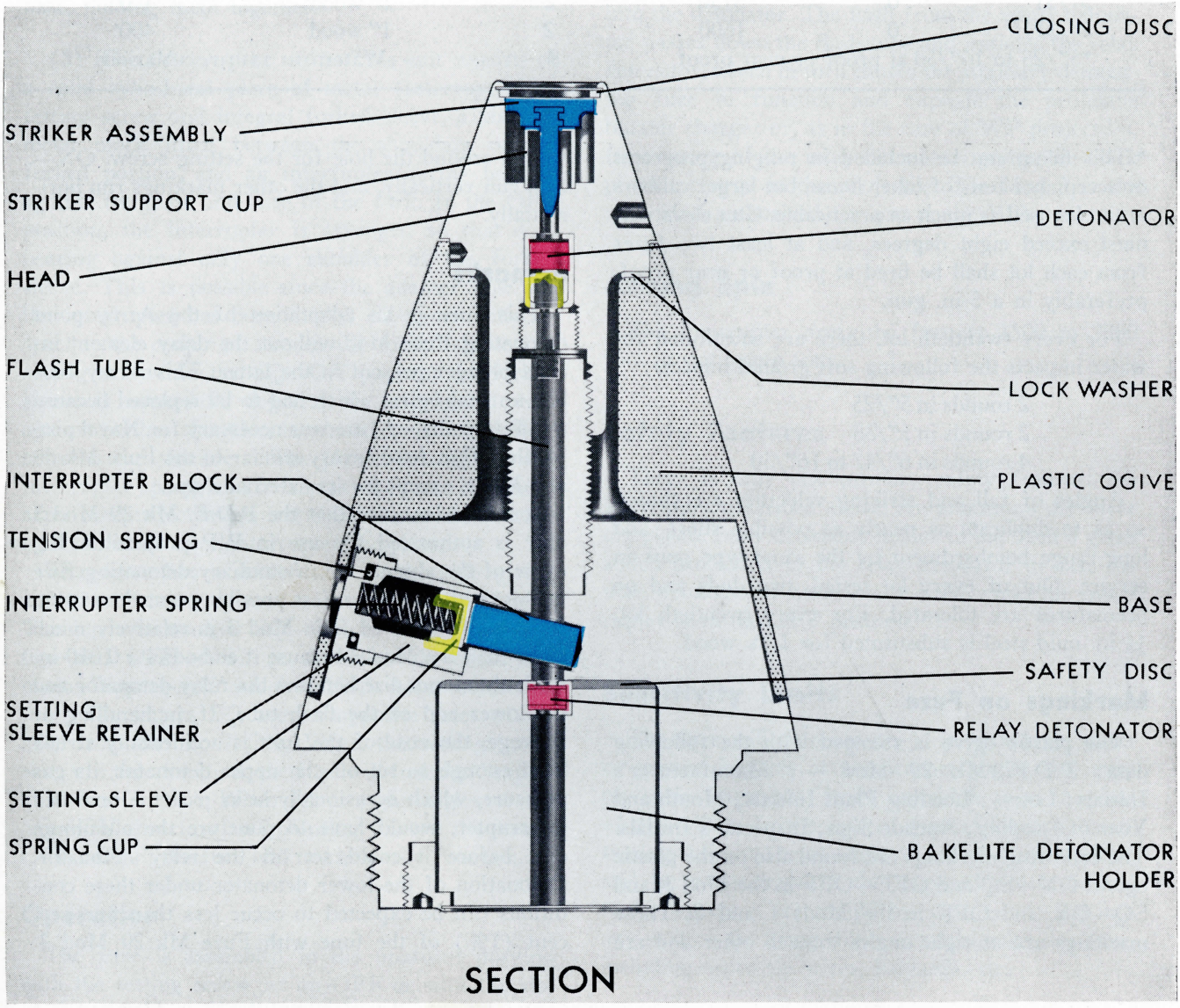

Figure 30.—Point Detonating Fuze Mk 30—Sectional View

Chapter 15

POINT DETONATING FUZE MARK 30

General Data

Designation and Type

Point Detonating Fuze Mk 30 Mod —

Projectiles Used In

AA (Used as HC)	HC
3″/23 cal.	4″/50 cal.
3″/50 cal.	5″/54 cal.
	6″/47 cal. (DP)

Overall Dimensions and Weight

Length ..... 4.57 in.
Body threads ..... 1.70-in.—14NS-1RH
Weight ..... 1.38 ± 0.03 lb.

Material

Base ..... Steel
Nose piece ..... Brass
Ogive ..... Plastic (cloth base)
Flash tube ..... Steel
Relay detonator holder ..... Plastic

Applicable OS 3303
3014 (Plastic ogive)

General Arrangement Drawing No.

328822 (Mod 0, 1 and 2)
422326 (Mod 3)

Explosives Used

Nose detonator—Azide primer cap mixture and lead azide (compound detonator)
Relay detonator—Lead azide

Description

The Fuze Mk 30 is essentially the same as the Fuze Mk 29. The body and nose units are the same —the only difference being in a longer flash tube and a longer, smaller-diameter, ogive for the Mk 30. Both ogives have a cloth base of fabric impregnated with thermosetting phenolic resin; however, in the Mk 29 type ogive, the resin treated fabric undergoes a creping process, such as to increase the number of ends and picks per inch by at least 15% of the original construction of the untreated fabric. The Mk 30 ogive cloth base undergoes no creping process.

Operation

The fuze is assembled in the unarmed position with setting screw set on OFF, or with the slot at a right angle to the long axis of the fuze. In this



Figure 31.—Point Detonating Fuze Mk 30 Exterior View Full Size

condition, a spring-loaded interrupter is locked in position, blocking the flash tube between the detonator in the nose and the relay in the base. Under these circumstances, if the forward detonator fires, the relay detonator normally will not. Provided the screw is set on ON or SQ before loading in a gun, the interrupter can be acted upon by centrifugal force against the action of its spring and unblock the flash tube. This action takes place after the projectile has left the muzzle of the gun. Since the firing pin is held in position only by a support cup, the fuze is fully armed as soon as the flash tube is clear. On impact, the firing pin support collapses and the firing pin is driven into the detonator. The flash from the upper detonator passes down the flash tube and initiates the relay detonator, which in turn causes the auxiliary detonating fuze to function and explode the projectile burster charge. An auxiliary detonating fuze is always used in conjunction with this fuze.

Arming Spin

The interrupter arms the fuze at 1500 to 2000 rpm in static spin tests.

Safety Features

There is only one primary safety feature: the interrupter described above. An aluminum disc over the plastic relay detonator holder gives added protection to the relay detonator in case the nose detonator is accidentally fired while the interrupter is in the OFF position.

Sensitivity Limits

The fuze will detonate on ½-in. wood, on water or ground impacts at non-richochet angles, and even on cork fragments from cartridge cases in case of direct hits. In the case of ground impacts, functioning is limited to an angle of fall of eight degrees; and for water impacts, the angle of fall is limited to 12 degrees. Care should be taken not to fire into any part of the firing ship's structure with this fuze, including antennae wires, halyards, etc.

Acceptance Test Data

Sample fuzes chosen at random from each production lot are subjected to routine safety tests and ballistic tests as follows:

Caliber	Rounds	Velocity	Material	Obliquity	Range
3″/50	2	2700 f/s	1″ wood	0	400′
3″/50	2	1400	1″ wood	0	400′
4″/50	2	2900	1″ wood	0	400′
4″/50	2	1400	1″ wood	0	400′
*3″/50 to 6″/47 DP	8	Service	Water impact		Various

* Any caliber normally assembled with Fuzes Mk 30 is used. 5″/54 caliber and 6″/47 DP should be used whenever practicable. Gun elevation must exceed eight degrees, and at least two fuzes from each lot are fired at proof or near proof, preferably in a 3″/50 caliber gun.

For every twentieth lot eight ground impacts are substituted for the water impacts, and fired in 6″/47 DP projectiles. If these are not available, 5″/54 or 4″/50 projectiles are used. Angles of fall and striking velocities should duplicate short and long range bombardment by the same type of gun in service. In every twentieth lot ⅛-in. mild steel is substituted for the wood target.

Acceptance Requirements—No prematures are allowable. Two duds out of all fuzes fired from each lot are allowed, and in addition to the two duds not more than one failure to give instantaneous action is allowed. Instantaneous action is defined as the destruction of the wood or steel target with fragments of the projectile in the side towards the gun or in case of water or ground impacts, the apparent burst of the projectile on contact with the ground or water without intermediate richochet.

Ballistic tests should be frequently conducted in guns in the last third of their normal life.

Markings on Fuze

The following markings are found on the plastic ogive: ON—SQ and OFF—OFF in the Mod 3, and

SQ—ON and —OFF in the Mods 1 and 2. These markings are at right angles to each other and are spaced around the hole for the setting screw. ON—SQ, run vertically, and the other markings run horizontally. On the opposite side of the ogive are stenciled the following data: P.D.F. Mk 30 Mod —; Manufacturer's Initials; Lot —; Initial of Loading Plant; Date of Loading; Anchor Sign; Inspector's Initials.

Remarks

This fuze is an adaptation of the Army Fuze M 48 with the delay element omitted. It is very similar to the Fuze Mk 29 and Mods, except for its external shape.

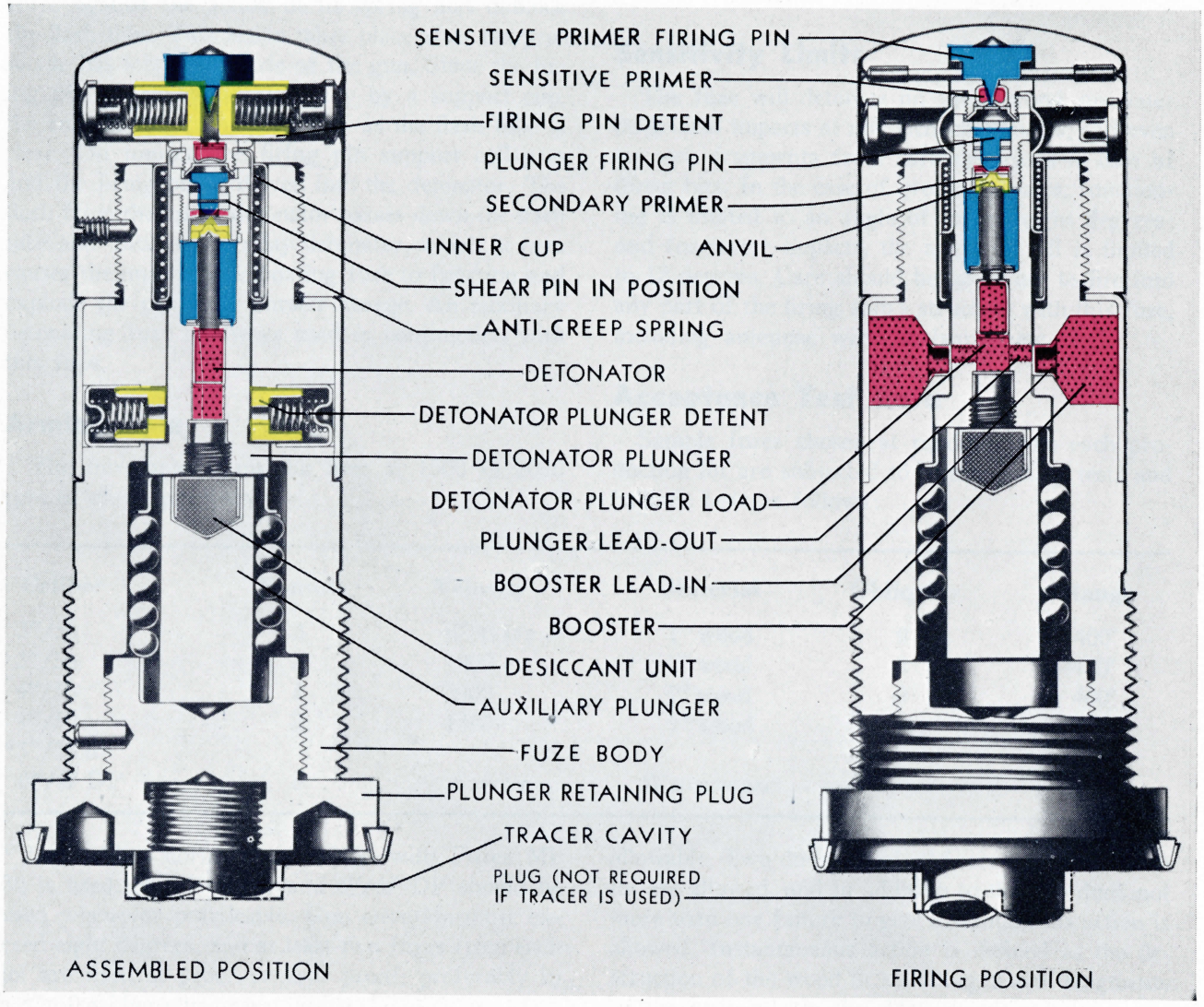

Figure 32.—Base Detonating Fuze Mk 31—Sectional View

Chapter 16

BASE DETONATING FUZE MARK 31

General Data

Designation and Type

Base Detonating Fuze Mk 31 Mod —

Projectiles Used In

4″/50 cal. HC Mk 15, and certain rockets

Overall Dimensions and Weight

Length	4.67 in.
Body thread length	1.09 in.
Body threads	1½-in.—12NF-3LH
Weight	1.58 ± 0.04 lb.

Material

Body	Pearlitic manganese steel
Detonator plunger	Pearlitic manganese steel
Nose cap	Aluminum alloy

Applicable OS 3429

General Arrangement Drawing No. .. 423486

Explosives Used

1 Sensitive primer cap—Fulminate of mercury cap mixture (includes potassium chlorate and antimony sulphide)

1 Relay primer cap—Fulminate of mercury cap mixture (includes potassium chlorate and antimony sulphide)

1 Detonator—Lead azide

1 Detonator plunger load—Tetryl

2 Plunger lead-outs—Tetryl

2 Booster lead-ins—Tetryl

2 Booster—Tetryl

Description

The Fuzes Mk 31 and Mk 36 are practically identical to Fuzes Mk 28 and Mk 20, respectively, except that they are shorter in that the tracer cavity is omitted. This is necessary because of the small filler space in the 4-in. projectiles compared to 5-in. and larger. If a tracer is used at all, it must be an external one (Mk 4). Each fuze is composed of three major parts; namely, the base flanged plug, the fuze body, and the nose cap. The fuze body contains the auxiliary plunger assembly, the detonator plunger assembly, detents, anti-creep spring assembly and two sidewall boosters protected by a booster cover. The nose cap, which is screwed onto the for-



Figure 33.—Base Detonating Fuze Mk 31 Exterior View Full Size

ward end of the fuze body, houses the sensitive firing pin and detents. A locking pin is provided to lock the nose cap in position after final assembly at the loading plant. The fuze is moistureproofed by the application of a lacquer plus a final coat of Bakelite varnish. The base flanged plug of the fuze body is threaded to receive an external Tracer Mk 4.

Operation

The fuze is assembled in the unarmed position. All components of the fuze remain in this position during transportation, storage, and until after the fuzed projectile is fired from the gun. After the projectile leaves the muzzle of the gun, the detonator plunger detents and the sensitive firing pin detents are forced outward by centrifugal force against their spring pressure and friction. This does not occur in the bore of the gun, because the side-wall friction forces due to acceleration are greater than the centrifugal forces. Also, the sensitive firing pin is slightly movable and at setback binds against the sensitive firing pin detents, holding them in the safe position. Close outside the muzzle where the acceleration ceases, the side-wall friction drops off sharply and the radially moveable parts (detents) snap outward due to the continuous centrifugal force. The detonator plunger is now unlocked but is retained in the safe (rearward) position during flight by the resistance of the anti-creep spring which acts against the flanged end of the inner anti-creep spring cup attached to the detonator plunger. Since the sensitive firing pin detents have been thrown out of the way, the sensitive firing pin is free to be impinged upon by the sensitive primer cap held in the detonator plunger immediately upon impact of the projectile. At this time the detonator plunger, aided by the momentum of the auxiliary plunger on its ball bearings, continues forward, impinging the sensitive primer cap onto the sensitive firing pin. The gas pressure from the explosion of the sensitive primer cap drives the round-pointed plunger firing pin against the relay primer cap, while at the same time these gases pass through the port holes on the side of the primer container and build up a high pressure within the inner cup for anti-creep spring, expanding that part of the cup which is adjacent to the drilled holes in the nose cap. The bulging of the inner cup for the anti-creep spring locks the detonator plunger in the forward firing position. In this firing position the lead-out holes in the plunger are in alignment with the booster lead-in holes. The firing of the detonator plunger relay primer cap in turn functions the detonator, two plunger lead-outs, two booster lead-ins, two boosters, and the projectile bursting charge.

In this fuze there appears to be no obvious need for the relay primer cap at all, and efforts are being made to eliminate it. It is present in the fuze because the Fuze Mk 28 is an adaptation of the Base Detonating Fuze Mk 20, wherein the delay primer cap serves the specific purpose of igniting the delay element and maintaining a satisfactory pressure within the plunger during the delay burn-through time.

Arming Spin

The fuze arms in static spin tests between 3000 and 4500 rpm.

Safety Features

The safety detent mechanisms are armed only by centrifugal force at a relatively high magnitude. Two sets of detents, one to prevent the sensitive primer from impinging on the sensitive firing pin, and the other set for holding the detonator plunger in the safe rearward position, insure that all four detents will not become accidentally withdrawn at the same time. Furthermore, the fuze is "detonator safe." That is, when the fuze is in the safe position (plunger rearward), and the detonator is set off by any cause, the force of the detonator is dissipated and the booster will not be detonated.

Sensitivity Limits

Fuzes Mk 31 will function at all probable velocities and obliquities against ⅜-in. mild steel plate in the 4″/50 caliber HC projectiles. They will function reliably on ground and water impacts down to angles of fall of about 2° and 5°, respectively.

Acceptance Test

Four completely live-loaded fuzes from each lot are assembled in 4-in. projectiles and fired and subjected to the following ballistic acceptance tests:

Rounds	Velocity	Obliquity	Plate
2	2200 f/s	45°	⅜" m.s.
2	1000 f/s	0°	⅜" m.s.
1 (from 1st and each 5th lot thereafter)	2200 f/s	Water impact at non-ricochet angles	

Detonation of tested samples must take place at not more than 4 ft. behind the plate when the projectile is fired at 2200 f/s velocity and not more than 2 ft. at 1000 f/s velocity. For the plate impact test, an overall performance of 75% high-order functioning is required for acceptance of each lot. For the water impact test, satisfactory performance, when combined with the plate impact test, shall be 80% high-order functioning. A premature functioning of any fuze shall cause rejection of the lot.

Marking on Fuze

Around the exposed base of the fuze the following marking appears: Mark 31 Mod —; Lot —; Loading Plant Initials or Symbol; Month and Year of Loading; Inspector's Initials; Anchor Stamp and Manufacturer's Initials or Symbol.

Remarks

Fuzes Mk 31 and Mk 36 differ from each other in that the latter contains an 0.01 second delay element, while the former contains none. The Fuze Mk 31 also has a weaker anti-creep spring acting on the detonator plunger than does the Fuze Mk 36. The fuzes also differ in the material used in their respective detonator plungers. The Fuze Mk 31 uses pearlite manganese steel for the detonator plunger, and the Fuze Mk 36 uses chrome-molybdenum steel. They both have the slight inherent mechanical delay peculiar to all inertia plunger-type base fuzes on the order of about 0.003 second.

The Fuze Mk 31 Mod 0 is the moistureproofed design as described for Fuzes Mk 28 Mod 15. Fuzes of the Mk 31 type are manufactured and loaded at the Naval Torpedo Station, Newport, R. I.; also inert parts are being manufacturered at N. O. P., Milledgeville, Ga., and at commercial manufacturers for loading at N. O. P., Macon, Ga.

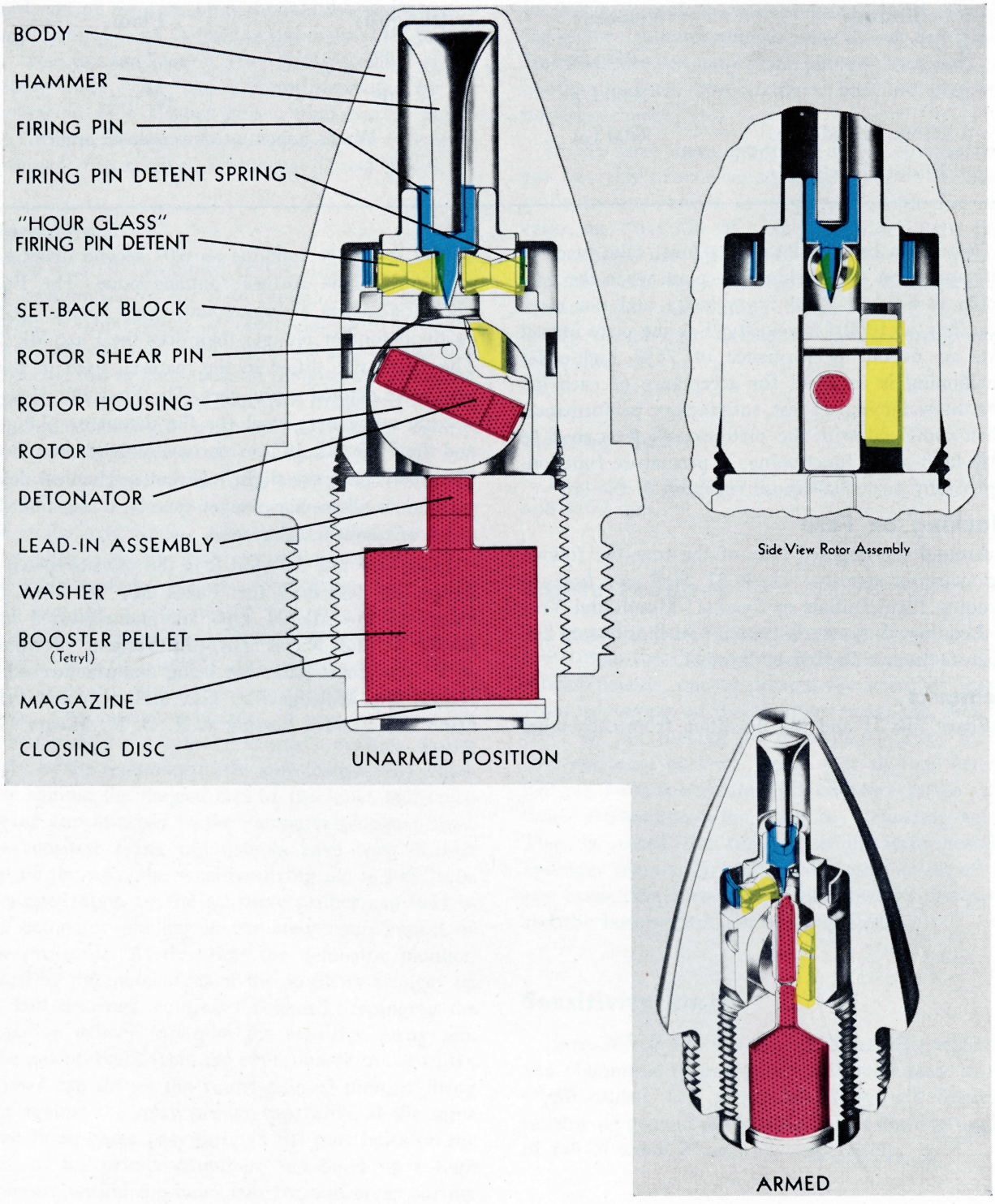

Figure 34.—Point Detonating Fuze Mk 34—Sectional View

Chapter 17

POINT DETONATING FUZE MARK 34

General Data

Designation and Type

Point Detonating Fuze Mk 34 Mod —

Projectiles Used In

1.1-in. AA

Overall Dimensions and Weight

Length ..... 2.072 in.
Body threads ..... 0.875-in.—20NS-1RH
Weight ..... 82 ± 2 gm.

Material

Body ..... Die-cast zinc alloy
Magazine ..... Brass
Rotor housing ..... Die-cast aluminum
Rotor ..... Brass

Applicable OS 2870

General Arrangement Drawing No. .. 375643

Explosives Used

Lead azide primer mix, lead azide and tetryl in detonator
Tetryl in booster lead-in, and in booster magazine.

Description

The fuze consists essentially of a zinc alloy die-cast body, plastic hammer, firing pin with detents, rotor block, rotor, and magazine. The plastic hammer is located in the forward end of the nose. The after end of the hammer is supported in a hole in the stab-type firing pin, which is held safe by two detents with a spring similar to that used for Fuzes Mk 27. The rotor and rotor block firing pin holder combined, is a die casting located in the center of the body, and held in place by the magazine which screws into the after end of the fuze body.

Operation

The fuze is assembled in the unarmed position and remains so during transportation and storage. On firing the fuzed projectile from the gun, both centrifugal force and the force of setback act to free the firing pin and to permit rotor alignment of the detonator with firing pin and lead-in. The rotor with the detonator is assembled in the rotor block with the axis of the detonator at an angle of about 65 degrees from the axis of the fuze. The rotor is held in the unarmed position by means of slider block which is pinned to it by means of a copper shear wire. In this position the detonating element is safe; and if the detonator were to be exploded in this position, it would not detonate the booster. The force of setback drives the slider block down in the slot, shearing the copper shear wire, which leaves the rotor free to revolve to its armed position when setback ceases close outside the muzzle. Since the centrifugal force of the rotating projectile has released the firing pin detents, arming is now complete. Upon impact, the nose of the fuze receives a sharp blow which causes the plastic hammer to propel the firing pin. The firing pin stabs and fires the detonator, thereby initiating the explosive train of the booster lead-in, the booster, and the explosive filler of the projectile.



Figure 35.—Point Detonating Fuze Mk 34 Exterior View Full Size

Arming Spin

Firing pin detents arm from 16,000 to 26,000 rpm in static tests.

Safety Features

The safety detents of the firing pin are armed only by centrifugal force of relatively high magnitude. The rotor cannot turn into alignment by centrifugal force until after the shear pin binding the setback block to the rotor is sheared. This requires a high degree of acceleration such as is obtained by firing at velocities between 2000 f/s or higher.

In the Mod 1 an added safety feature is provided by the modified detents holding the firing pin. Because of a rough resemblance, this type is known as "hour-glass" detents. Instead of being solid cyclindrical metal pieces, each detent is tapered inward from each end toward the center. Added bore safety is provided in the design; for when setback sets in and the firing pin moves back against the detents, they will be held in place because of their shape until the firing pin moves forward again under the influence of creep. However, the manufacture and loading of Fuzes Mk 34 type was discontinued prior to the production or issue of any Fuzes Mk 34 Mod 1.

Sensitivity Limits

This fuze should function consistently when fired against $\frac{3}{16}$-in. binder's board or cardboard at 0-degree obliquity at service velocity, or other material offering comparable resistance.

Acceptance Tests

Sample fuzes chosen at random from each production lot are subjected to routine safety tests and the following ballistic tests:

Sensitivity and Functioning Tests—Twenty fuzes from each lot are tested by firing against $\frac{3}{16}$-in. thick binder's board or cardboard. The tests shall be conducted at service velocity with the target 150 feet from the gun and at 0-degree obliquity. A minimum of 90% performance is required. Each fuze shall cause detonation within two feet after striking the target.

Markings on Fuze

P.D.F. Mk 34, Mod —; Lot —; Manufacturer's Initials; Inspector's Initials; Year of Manufacture.

Remarks

This is the only projectile fuze in U. S. Navy use at present which employs the sliding setback block and shear wire feature to secure the rotor in the unarmed position prior to firing. This fuze superseded the older Mk 12 type design. The Fuze Mk 34 Mod 1 employs firing pin detents of a shape known as "hour-glass" detents. This type is more bore-safe than the earlier cylindrical type; however, the manufacture and loading of Fuzes Mk 34 type was discontinued prior to the production or issue of any Fuzes Mk 34 Mod 1. In view of the tremendous quantities on hand of Fuzes Mk 34 Mod 0, also Fuzes Mk 12 and Mods of the "eared" type, it is doubtful if new production will be required for several years.

Chapter 18

AUXILIARY DETONATING FUZE MARK 35

General Data

NOTE: The Fuzes Mk 35 and Mk 46 differ only in the strength of the detent springs. Those of Fuzes Mk 35 are weakened to make this fuze suitable for use in major-caliber low-spin HC projectiles.

Designation and Type

Auxiliary Detonating Fuze Mk 35 Mod 0

Projectiles Used In

HC 8″, 12″, 14″, and 16″

Overall Dimensions and Weight

Length	2.50 in.
Body threads	1⅜-in.—20NS-2LH
Weight	0.76 ± 0.02 lb.

Material

Body	Steel
Closing plug	Steel or brass
Booster cap	Steel
Rotor block	Aluminum alloy
Rotor	Aluminum alloy
Firing pin holder	Brass
Base for rotor	Brass

Applicable OS Use O.S. 2104 (where pertinent)

General Arrangement Drawing No.

329950, Rev. E

Explosives Used

Primer cap—Fulminate of mercury cap mixture
Detonator—Fulminate of mercury and tetryl
Booster lead-in—Tetryl
Booster—Tetryl

Description

The fuze is composed of a one-piece body with a booster cap and plug closing the respective ends. The body assembly houses the firing pin assembly, the rotor block assembly and the base for the rotor. In the middle of the closing plug is an obturating cup, and there is a sealing disc between the plug and the firing pin housing. The fuze is designed:

(1) To detonate the projectile explosive charge and thereby burst the projectile with high-order detonation instantaneously after the initiating explosive charge in the nose fuze is fired.

(2) To insure safety in transportation and stowage and to prevent detonation of the projectile in the gun should the initiating nose fuze function prematurely.

(3) Not to function or detonate when assembled in a projectile and then dropped nose-, side-, or base-down from a height of 40 feet onto armor plate.

Operation

The fuze is assembled in the unarmed position and remains in this condition during transportation and stowage and until the projectile in which it is assembled is fired from a gun. When the projectile is fired from a gun centrifugal force moves the firing pin detents and rotor detents outward, overcoming the holding forces and thereby releasing the firing pin and rotor.

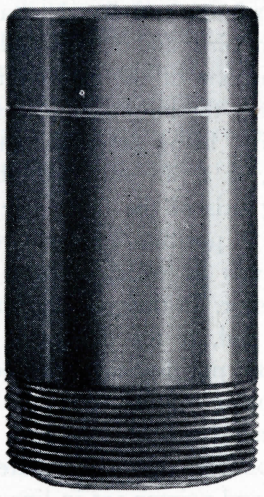

Figure 36.—Auxiliary Detonating Fuze Mk 35 Exterior View Full Size

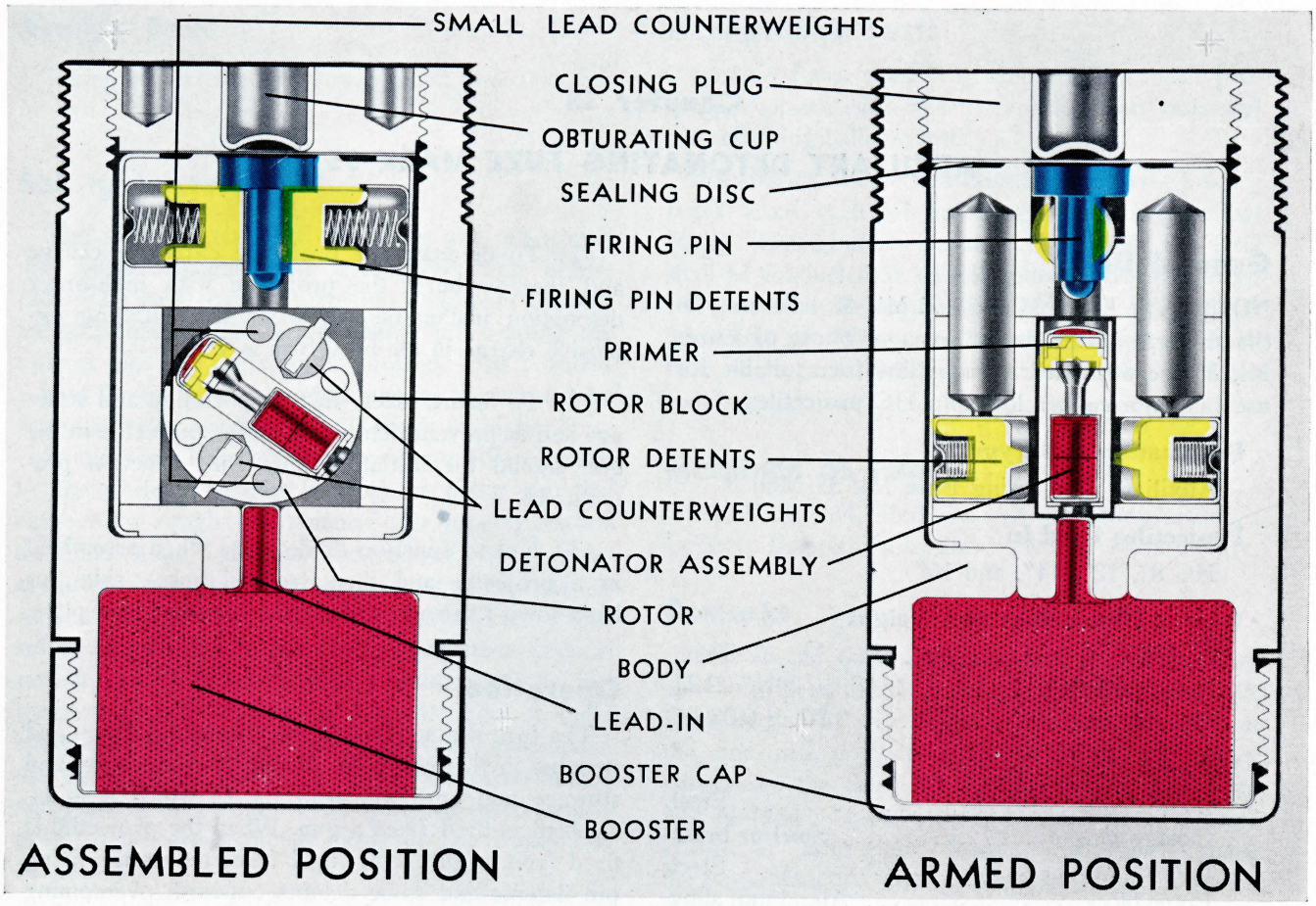

Figure 37.—Auxiliary Detonating Fuze Mk 35—Sectional View

The rotor, which contains four lead counterweights, the primer, and the detonator, is provided with two stop pins and is assembled in the rotor block with the axis of the detonator at an angle of 55 degrees from the long axis of the fuze. The line of the stop pins, being perpendicular to the axis of the detonator, is at an angle of about 35 degrees from the long axis of the fuze. The rotor is held in this (unarmed) position by the two rotor detents, the tapered ends of which engage in holes in the sides of the rotor. In this position the detonator element is safe and, if the detonator were to be exploded, it would not detonate the booster. The rotor detents, on being moved outward by centrifugal force, withdraw from the holes in the rotor, permitting the counterweights to rotate the rotor until the detonator and primer are in line with the booster lead-in and the firing pin, respectively. In this position the rotor is not in dynamic equilibrium but, due to the positions of the two smaller lead counterweights and the two empty holes, is tending to rotate further. Further rotation of the rotor is prevented by the stop pins which press against the edges of the two holes, one placed in each side of the rotor housing. The purpose of this arrangement is to maintain a positive torque on the rotor, acting to hold it in the armed position throughout all motion of the projectile in flight. Fuzes of Mk 35 type have the further advantage over the Mk 17 type of auxiliary detonating fuze in that they have an increased amount of arming energy, thus insuring that arming will take place even though the fuze is not exactly concentric with the axis of the projectile.

The rotor is now fully armed, the firing pin is released and the fuze functions as follows: The gas pressure and/or shock wave from action of the nose fuze forces the obturating cup down and shears the sealing disc adjacent to the firing pin. The firing pin

is in turn forced against the primer cap and anvil, which activates the detonator, the booster lead-in, and the booster.

Arming Spin

The detents arm between 1600 and 1900 rpm in static spin tests.

Safety Features

The rotor assembly and firing pin are held in the unarmed position by their respective safety detents. The fuze is armed only by centrifugal force. One set of detents holds the firing pin and one set holds the rotor unit in the unarmed position. In addition, centrifugal force is necessary to cause the counterweights to carry the rotor to its armed position when the added friction due to setback has ceased.

If the detonator should fire in the unarmed position it would not detonate the booster charge.

Ballistic Acceptance Tests

Sample fuzes are chosen at random from the preliminary and from each production lot and subjected to routine safety tests and ballistic tests as follows:

Flight Test: Two fuzes are assembled in service-loaded projectiles with dummy time fuzes and fired from a gun. The fuzes must not function to explode the bursting charge during flight.

Functioning Test: Five fuzes from every fifth lot are assembled in 12-in., 14-in., or 16-in. projectiles loaded in any manner which will give positive evidence of fuze functioning, with time or impact fuzes of proven high quality, and fired from a gun at target velocity or greater. If a time fuze is used, various fuze settings shall be employed. High-order functioning of the burster charge upon nose fuze action is the criterion of satisfactory auxiliary detonating fuze action. Acceptance is based on 100% high-order functioning.

In order to conserve major-caliber projectiles, five fuzes from all other lots are tested in 5″/51 caliber projectiles, each assembled with a nose fuze of proven high quality at a muzzle velocity of about 1050 f/s, which closely simulates the setback and spin conditions of the 16-in. gun. Acceptance of the lot is based on 100% high-order detonation of the projectiles. No prematures attributable to this auxiliary detonating fuze are allowable.

Markings on the Fuze

On the closing plug, the following data are stamped:

AUX.
DET. FUZE
MK 35
LOT NO. —

followed by Initial of Loading Plant; Manufacturer's Symbol; Anchor Sign; Year and Month of Loading; Inspector's Initials.

Remarks

The design of the Fuze Mk 35 was adopted to replace Fuzes Mk 17 Mod 8 (Mk 46) type because it arms more reliably when mounted off-center, simulating conditions in an unsymmetrical projectile or one which is not spinning exactly about its own axis in flight. The stop pins on the rotor also assure that the detonator will be exactly lined up with the firing pin and the booster lead-in, which is not strictly true in the original Mk 17 design because the position of equilibrium is also that of zero torque. It was also necessary to reduce the arming speed to permit arming in major-caliber projectiles.

Chapter 19

BASE DETONATING FUZE MARK 36

General Data

Designation and Type

Base Detonating Fuze Mk 36 Mod —

Projectiles Used In

4"/50 cal. Special Common Mk 16

Overall Dimensions and Weight

Length ..... 4.67 in.
Body thread length ..... 1.090 in.
Body threads ..... 1½-in.—12NF-3LH
Weight ..... 1.58 ± 0.04 lb.

Material

Body ..... Pearlitic manganese steel
Detonator plunger... Chrome-molybdenum steel
Nose cap ..... Aluminum alloy

Applicable OS 3429

General Arrangement Drawing No. .. 423485

Explosives Used

1 Sensitive primer cap—Fulminate of mercury cap mixture (includes potassium chlorate and antimony sulphide)
1 Delay primer cap—Fulminate of mercury cap mixture (includes potassium chlorate and antimony sulphide)
1 Delay element (0.01 second)—Black powder
1 Detonator—Lead azide
1 Detonator plunger load—Tetryl
2 Plunger lead-outs—Tetryl
2 Booster lead-ins—Tetryl
2 Boosters—Tetryl

Description

The Fuzes Mk 31 and Mk 36 are practically identical to Fuzes Mk 28 and Mk 20, except that they are shorter in that the tracer cavity is omitted. This is necessary because of the small filler space in the 4-in. projectiles compared to 5-in. and larger. If a tracer is used at all, it must be an external one (Mk 4). Each fuze is composed of three major parts; namely, the base flanged plug, the fuse body, and the nose cap. The fuze body contains the auxiliary plunger assembly, the detonator plunger assembly, detents, anti-creep spring assembly, and two sidewall boosters protected by a booster cover. The nose cap, which is screwed onto the forward end of the fuze body, houses the sensitive firing pin and detents. A locking pin is provided to lock the nose cap in position after final assembly at the loading



Figure 38.—Base Detonating Fuze Mk 36 Exterior View Full Size

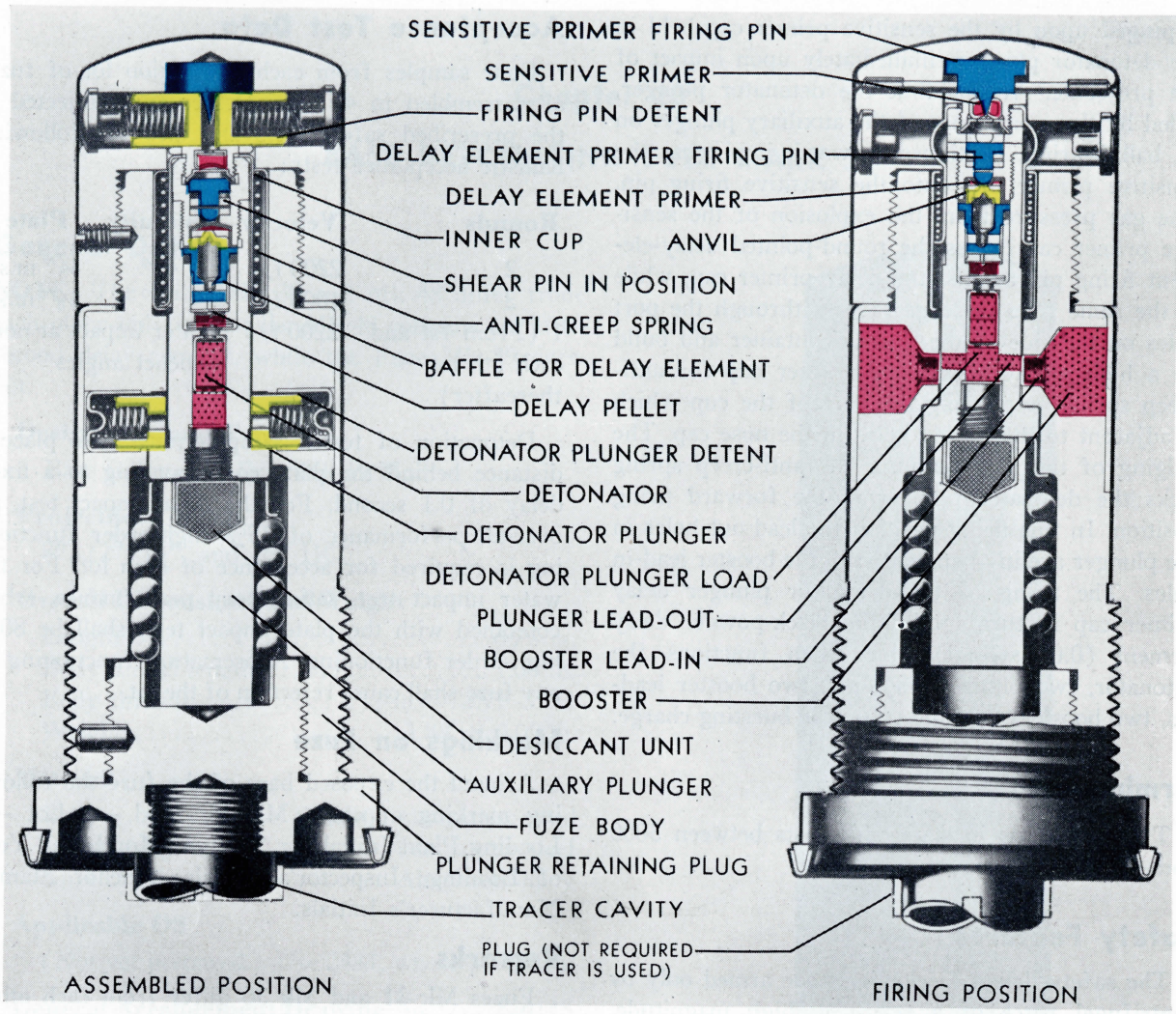

Figure 39.—Base Detonating Fuze Mk 36— Sectional View

plant. The fuze is moistureproofed by the application of a lacquer plus a final coat of Bakelite varnish. The base flanged plug of the fuze body is threaded to receive an external tracer Mk 4.

Operation

The fuze is assembled in the unarmed position. All components of the fuze remain in this position during transportation, in storage, and until after the fuzed projectile is fired from the gun. After the projectile leaves the muzzle of the gun, the detonator plunger detents and the sensitive firing pin detents are forced outward by centrifugal force against their spring pressure and friction. This does not occur in the bore of the gun, because the side-wall friction forces due to acceleration are greater than the centrifugal forces. Also, the sensitive firing pin is slightly moveable and at setback binds against the sensitive firing pin detents, holding them in a safe position. Close outside the muzzle, where the acceleration ceases, the side-wall friction drops off sharply and the radially moveable parts (detents) snap outward under pressure of the continuous centrifugal force. The detonator plunger is now unlocked but is retained in the safe (rearward) position during flight by the resistance of the anti-creep spring, which acts against the flanged end of the inner anti-creep spring cap attached to the detonator plunger. Since the sensitive firing pin detents have been thrown out of the way, the sensitive firing pin is free to be

impinged upon by the sensitive primer cap held in the detonator plunger, immediately upon impact of the projectile. At this time the detonator plunger, aided by the momentum of the auxiliary plunger on its ball bearing, continues forward, impinging the sensitive primer cap onto the sensitive firing pin. The gas pressure from the explosion of the sensitive primer cap drives the round-pointed delay-element firing pin against the delay primer cap, while at the same time these gases pass through the port holes on the side of the primer container and build up a high pressure within the inner cup for anti-creep spring, expanding the part of the cup which is adjacent to the drilled holes in the nose cap. The bulging of the inner cup for the anti-creep spring locks the detonator plunger in the forward firing position. In this firing position the lead-out holes in the plunger are in alignment with the booster lead-in holes. The firing of the detonator plunger delay primer cap in turn ignites the black-powder delay element (0.01 second) which then functions, the detonator, two plunger lead-outs, two booster lead-ins, two boosters, and the projectile bursting charge.

Arming Spin

The fuze arms in static spin tests between 3000 and 4500 rpm.

Safety Features

The safety detent mechanisms are armed only by centrifugal force of a relatively high magnitude. Two sets of detents, one to prevent the sensitive primer from impinging on the sensitive firing pin, and the other set for holding the detonator plunger in the safe rearward position, insure that all four detents will not become accidentally withdrawn at the same time. Furthermore, the fuze is "detonator safe." That is, when the fuze is in the safe position (plunger rearward), and the detonator is set off by any cause, the force of the detonator is dissipated and the boosters will not be detonated.

Sensitivity Limits

Fuzes Mk 36 will function at all probable velocities and obliquities against ⅜-in. mild steel plate in the corresponding 4″/50 caliber special Common projectiles. They will function reliably on ground and water impacts down to angles of fall of about 2° and 5°, respectively.

Acceptance Test Data

Four samples from each production lot of fuzes are assembled in 4-in. projectiles and subjected to the prescribed safety tests and also the following ballistic acceptance tests:

Rounds	Velocity	Obliquity	Plate
2	2200 f/s	45°	⅜″ m.s.
2	1000 f/s	0°	⅜″ m.s.
1 (From 1st and each 5th lot thereafter)	2200 f/s	Water impact at non-ricochet angles	

Detonation of tested samples must take place a distance behind the plate corresponding to a fixed delay of 0.1 second. For the plate impact test, an over-all performance of 75% high-order functioning is required for acceptance of each lot. For the water impact test, satisfactory performance, when combined with the plate impact test, shall be 80% high-order functioning. A premature functioning of any fuze shall cause rejection of the lot.

Markings on Fuze

Around the exposed base of the fuze the following marking appears: Mk 36, Mod —; Lot —; Loading Plant Initials or Symbol; Month and Year of Loading; Inspector's Initials; Anchor Stamp; Manufacturer's Initials.

Remarks

Fuzes Mk 31 and Mk 36 differ from each other in that the latter contains a 0.01-second delay element, while the former contains none. The Fuze Mk 31 also has a slightly weaker anti-creep spring acting on the detonator plunger than does the Fuze Mk 36. The Fuzes also differ in the material used in their respective detonator plungers. The Fuze Mk 31 uses Pearlite manganese steel for the detonator plunger, and the Fuze Mk 36 uses chrome-molybdenum steel. They both have the slight inherent mechanical delay peculiar to all inertia plunger-type base fuzes on the order of about 0.003 second.

The Fuze Mk 36 Mod 0 is the moistureproofed design as described for Fuze Mk 28 Mod 15.

Fuzes of the Mk 36 type are manufactured and loaded at the Naval Torpedo Station, Newport, and soon will be manufactured at the Naval Ordnance Plant, Milledgeville, Ga., for loading by Naval Ordnance Plant, Macon, Ga.

Chapter 20

BASE DETONATING FUZE MARK 39

General Data

NOTE: The Fuzes Mk 39 and Mk 48 differ from each other only in that the Mk 48 contains an 0.01-second delay element, while the Fuze Mk 39 does not.

Designation and Type

Base Detonating Fuze Mk 39 Mod —

Projectiles Used In

8″, 12″, 14″, and 16″ HC

Overall Dimensions and Weight

Length ..... 6.75 in.
Body thread length ..... 1.09 in.
Body threads ..... 1½-in.—12NF-3LH
Weight .....1.88 ± 0.09 lb.

Material

Body ..... Pearlitic manganese steel
Detonator plunger .. Pearlitic manganese steel
Nose cap ..... Aluminum alloy

Applicable OS

(Not yet prepared.) Use 2484, where pertinent.

General Arrangement Drawing No. 226148

Explosives Used

1 Sensitive primer cap—Fulminate of mercury cap mixture (includes potassium chlorate and antimony sulphide)
1 Relay primer cap—Fulminate of mercury cap mixture (includes potassium chlorate and antimony sulphide)
1 Detonator—Lead azide
1 Detonator plunger load—Tetryl
2 Plunger lead-outs—Tetryl
2 Booster lead-ins—Tetryl
2 Boosters—Tetryl



Figure 40.—Base Detonating Fuze Mk 39 Exterior View Full Size

Description

The fuze is composed of two major parts, namely, the fuze body and the nose cap. The fuze body contains the plunger retaining plug, the auxiliary

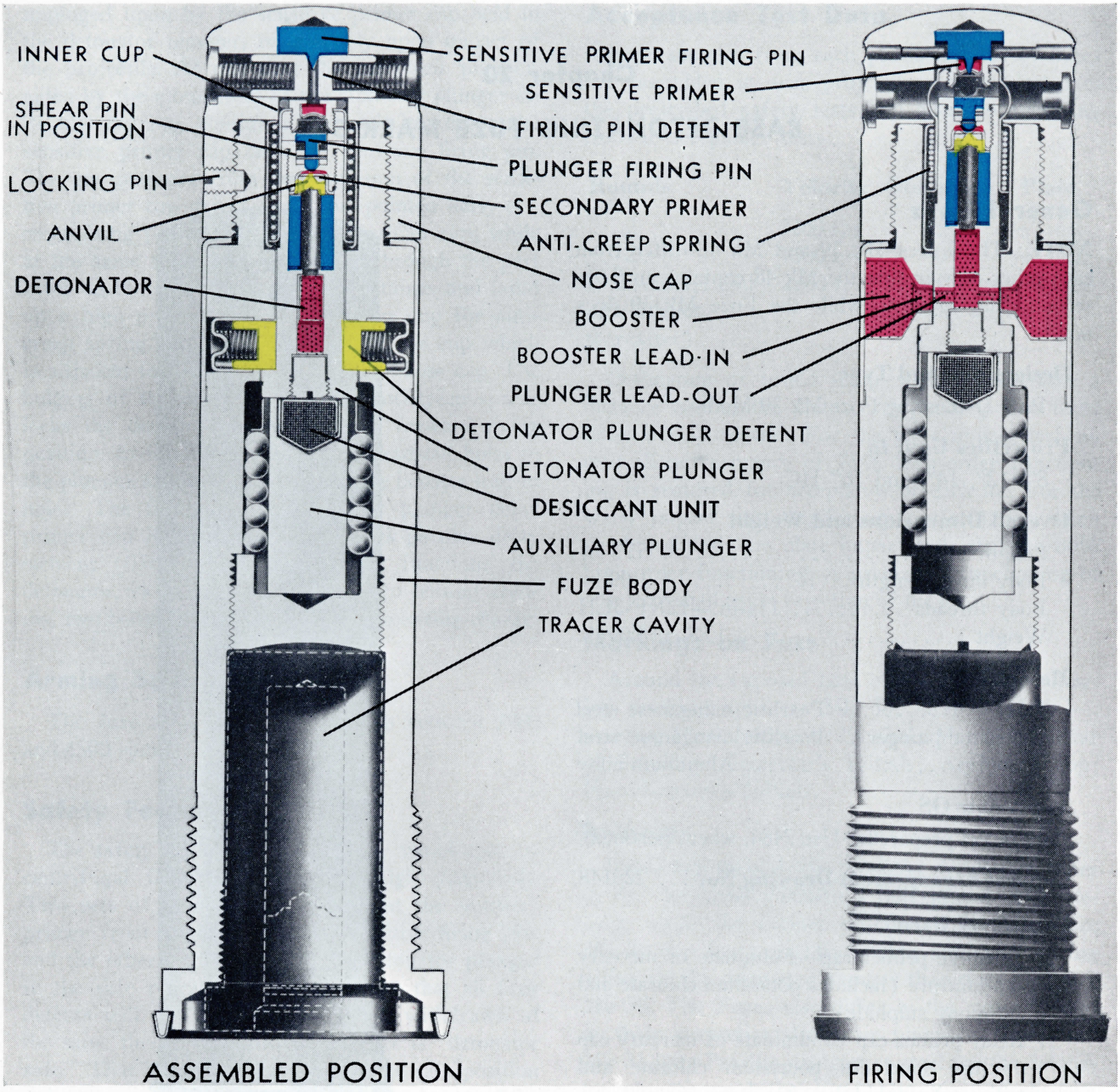

Figure 41.—Base Detonating Fuze Mk 39—Sectional View

plunger assembly, the detonator plunger assembly, detents, anti-creep spring assembly, the two sidewall boosters protected by a booster cover. The nose cap, which is screwed onto the forward end of the fuze body, houses the sensitive firing pin and detents. A locking pin is provided to lock the nose cap in position after final assembly at the loading plant. These fuzes were never moistureproofed. The base of the fuze body is fitted to receive a tracer.

Operation

The fuze is assembled in the unarmed position. All components of the fuze remain in this position during transportation, in storage, and until after

the fuzed projectile is fired from the gun. After the projectile leaves the muzzle of the gun, the detonator-plunger detents and the sensitive firing-pin detents are forced outward by centrifugal force against their spring pressure and friction. This does not occur in the bore of the gun, because the side-wall friction forces due to acceleration are greater than the centrifugal forces. Also, the sensitive firing pin is slightly moveable and at setback binds against the sensitive firing-pin detents, holding them in the safe position. Close outside the muzzle where the acceleration ceases, the side-wall friction drops off sharply and the radially moveable parts (detents) snap outward under pressure of the continuous centrifugal force. The detonator plunger is now unlocked but is retained in the safe (rearward) position during flight by the resistance of the anti-creep spring which acts against the flanged end of the inner anti-creep spring cup attached to the detonator plunger. Since the sensitive firing-pin detents have been thrown out of the way, the sensitive firing pin is free to be impinged upon by the sensitive primer cap held in the detonator plunger immediately upon impact. At this time the detonator plunger, aided by the momentum of the auxiliary plunger on its ball bearings, continues forward, impinging the sensitive primer cap onto the sensitive firing pin. The gas pressure from the explosion of the sensitive primer cap drives the round-pointed plunger firing pin against the relay primer cap, while, at the same time, these gases pass through the port holes on the side of the primer container and build up a high pressure within the inner cup for the anti-creep spring, expanding that part of the cup which is adjacent to the drilled holes in the nose cap. The bulging of the inner cup for the anti-creep spring locks the detonator plunger in the forward firing position. In this firing position the lead-out holes in the plunger are in alignment with the booster lead-in holes. The firing of the detonator-plunger relay primer cap in turn actuates the detonator, two plunger lead-outs, two booster lead-ins, two boosters, and the projectile bursting charge.

In this there appears to be no obvious need for the relay primer at all and efforts are being made to eliminate it. It is present in this fuze because the Fuze Mk 39 is actually a modified Fuze Mk 28, which is an adaptation of the Base Detonating Delay Fuze Mk 20, wherein the relay primer serves the specific purpose of igniting the delay element and maintaining a satisfactory pressure within the plunger during the delay burn-through time.

Arming Spin

The fuze becomes armed shortly after leaving the muzzle. Detents are required to arm in static spin tests between 1200 and 1400 rpm.

Safety Features

The safety detent mechanisms are armed only by centrifugal force of a relatively high magnitude. Two sets of detents, one to prevent the sensitive primer from impinging on the sensitive firing pin, and the other set for holding the detonator plunger in the safe rearward position, insure that all four detents will not become accidentally withdrawn at the same time. Furthermore, the fuze is "detonator safe." That is, when the fuze is in the safe position (plunger rearward), and the detonator is set off by any cause, the force of the detonator is dissipated and the boosters will not be detonated.

Sensitivity Limits

In all calibers from 8-in. to 16-in. in HC projectiles at 20 to 30 degrees obliquity and 1500 f/s striking velocity, the fuze will usually function on STS plate with a thickness of e/d equal to 0.07 or greater. "e" is the slant thickness of the plate (thickness divided by cosine of the obliquity) and "d" is the projectile diameter in inches. The sensitivity limit in 8-in. HC projectiles regardless of obliquity or striking velocity is $\frac{5}{8}$-in. STS plate. At 60 to 65 degrees obliquity, the fuze appears to be at least as sensitive as it is at lower obliquities. Data are insufficient to determine whether or not the sensitivity limit is affected appreciably by the striking velocity.

Acceptance Test Data

Sample fuzes chosen at random from each production lot are subjected to routine safety tests and to various ballistic tests in 8-in. to 16-in. HC projectiles. Specifically, five rounds from each lot of lots 3, 4, 5, 6, and 7 are assembled in 8-in. HC projectiles, and fired on $\frac{3}{4}$-in. plate at a velocity of 2000 f/s and at 30 degrees obliquity. Acceptance of lot is based on high-order functioning of three out of the five tested under the above conditions; or

under similar conditions at the discretion of NPG. One fuze from the first two lots is assembled in 14-in. HC projectiles and fired against 1-in. plate at 30 degrees obliquity.

Markings on the Fuze

Around the exposed base of the fuze body, the following data are stamped on each fuze: Mk 39—, Mod —; Lot —; Loading Plant's Initials; Year and Month of Loading; Inspector's Initials; Anchor Sign; Inert Parts Manufacturer's Initials.

Remarks

The Fuze Mk 39 is no longer in production, having been superseded by the Base Detonating Delay Fuze Mk 48. All fuzes Mk 39 were manufactured and loaded by Naval Torpedo Station, Newport, and none was waterproofed.

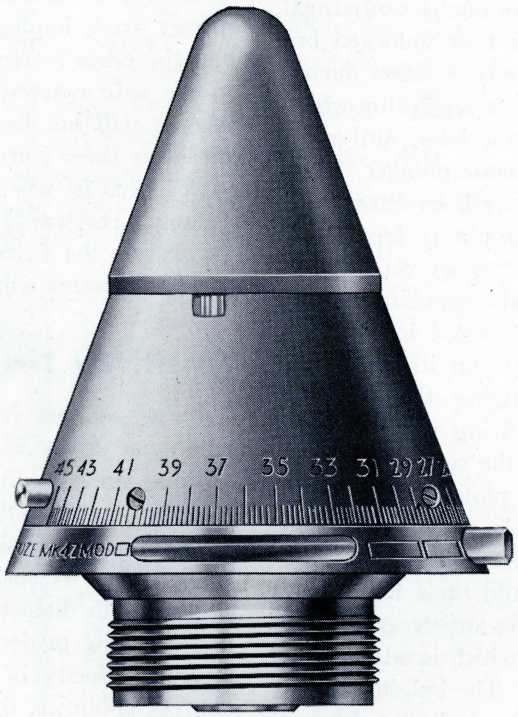

Figure 42.—Mechanical Time Fuze Mk 42—Exterior View Full Size

Chapter 21

MECHANICAL TIME FUZE MARK 42

General Data

Designation and Type

Mechanical Time Fuze Mk 42

Projectiles Used In

12″, 14″, and 16″ HC

Overall Dimensions and Weight

Length	4.313 in. max.
Body threads	1.70-in.—14NS-1RH
Weight	2.51 lb.

Material

Upper cap	Brass
Lower cap	Brass
Body	Brass

Applicable OS .....2114, where pertinent

General Arrangement Drawing No.

439905 (Mod 0)

Explosives Used

Primer cap contains either F.A. 70 primer mixture consisting of potassium chlorate, antimony sulphide, TNT and lead sulfocyanate or the F.A. 70 primer mixture modified to contain 8% ground glass. Magazine charge consists of not less than 40 grains of black powder in a moistureproof plastic container.

Description

The 45-second Mechanical Time Fuze, Mk 42, is designed to initiate detonation of high-explosive major-caliber projectiles after a predetermined lapse of time. These time fuzes are used in conjunction with auxiliary detonating fuzes which are actuated by the pressure (not flame) produced by the burning of the black-powder base charge of the mechanical time fuze. In its assembled form the fuze consists of four main sub-assemblies: the movement assembly, the body, the lower cap, and the upper cap. The movement assembly is attached to the inside of the body by three holding screws and contains the firing pin and the mechanism which eventually releases it. The brass body contains the magazine charge (not less than 40 grains of black powder in a plastic container which is practically impervious to moisture), the primer cap, a black-powder relay pellet (to augment flame from primer), and the bottom closing screw. The lower cap is inscribed with a scale graduated in seconds for setting the fuze and is attached to the body by a joint characterized by a tensioning feature wherein the tensional resistance to rotative relative movement between lower cap and body is adjusted by four screws during assembly, at the fuze manufacturing plant. The lower cap and body are each provided with a lug for engagement in the slot of a fuze setter or hand-setting wrench. The upper cap screws into the lower cap and contains a cylindrical weight suspended by a coiled spring anchored at the inner portion of the ogive's tip. This weight assists in flattening the hammer spring when the force of setback acts upon the fuze.

Operation

The mechanical clock movement of the fuze consists of an escapement driven by a spiral spring acting through a gear train. The fuze is assembled with the spring fully wound, but the mechanism is maintained in the unarmed condition during transportation and storage and until actually fired from a gun, by means of the safety features to be discussed. Centrifugal force releases the escapement so that it can be driven by the spring. The fuze primer is fired by a spring-driven firing pin which is released at the correct instant by a mechanism operated principally by centrifugal force but assisted by a coil spring. The timing element, termed the timing disc, which receives the selective setting, is connected to the main drive shaft, or center arbor, by a friction clutch which permits the timing disc to turn relative to the main drive shaft during the setting operation.

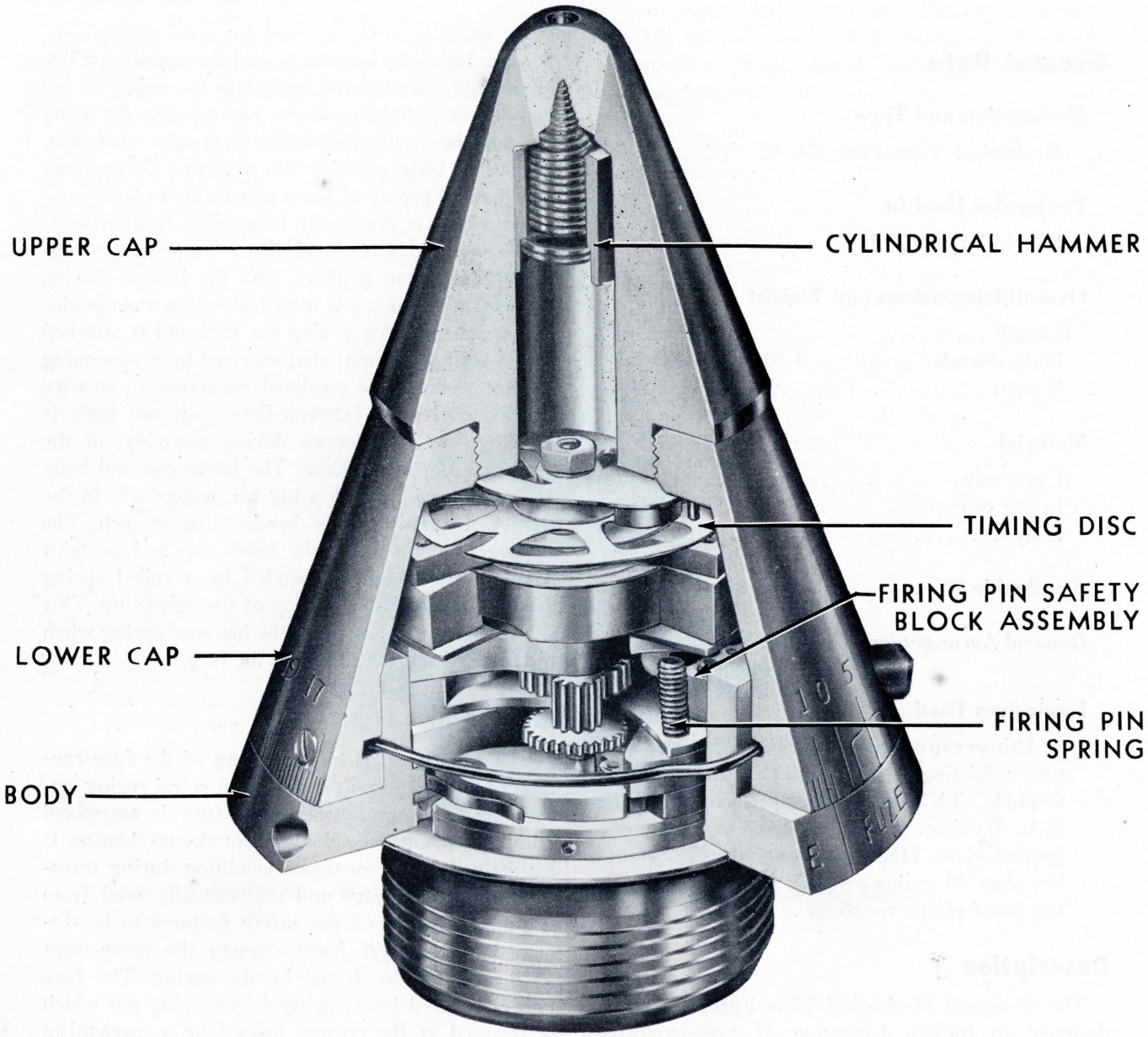

Figure 43.—Mechanical Time Fuze Mk 42—Cut-away

The setting operation consists of displacing the slot in the timing disc the proper distance circumferentially from the firing arm. When the fuze is set on SAFE, entrance of the firing arm into this slot is prevented by the location of the safety disc over the slot opening. At all operational settings of the fuze, however, the timing-disc slot has been swung around clear of the safety disc. In order to turn the timing disc relative to the firing arm, and to the main drive shaft, a setting pin is provided. This setting pin is fixed at one end to the top inside shoulder of the lower (rotative) cap in such a position as to be parallel to the longitudinal axis of the fuze. The free end of the setting pin engages the forked lug of the timing disc. Upon firing from a gun, disengagement of the setting pin from the forked lug is effected under force of setback by two small weights of the hammer spring assembly, which depress the forked lug. Since the setback force is relatively low in the large-caliber projectiles for which the fuze is designed, the flat hammer spring is aided by a cylindrical weight, which is suspended in the upper cap by a coil spring and which drops down on setback, to strike the flat hammer spring assisting blows. As soon as the force of setback decreases from its maximum value, the hammer spring and the coil spring begin to return their respective weights to their normal forward positions. The timing disc is thus clear of the weights which depressed the forked lug, but the lug remains bent down.

While the timing disc is being unlocked by forces of setback, the entire gear train, including the escapement mechanism and the main drive shaft, is unlocked almost simultaneously by two centrifugally controlled mechanisms. The first is the safety lever plate assembly which itself is held by a centrifugally operated detent. (The latter in turn is secured by a flat spring when the fuze is at rest.) The safety-lever plate detent swings out to free the safety-lever plate, which then also swings clear of the escapement lever, permitting the lever to begin its oscillations. Meanwhile, the second unlocking operation occurs at the other end of the gear train. The driving spring is allowed to start unwinding by centrifugal withdrawal of a center arbor detent, which is thrown out against the coil detent spring normally holding the detent in place. The unwinding of the spiral spring provides the driving force which sustains the movement of the timing disc in its measurement of time for which the fuze has been set. The speed of the timing disc, and therefore the accuracy with which the predetermined interval of time will be measured, depends upon the accuracy of the escapement mechanism which governs the speed of the fuze movement. The escapement mechanism is carefully adjusted and regulated prior to installation of the movement assembly in the fuze body.

The fuze functions at the end of the predetermined interval of time for which the fuze has been set. The firing train is set off when the timing disc has rotated to a point where the firing arm may enter the timing-disc slot. Centrifugal force acting on the operating weight of the firing arm moves the weight outward (with assistance of the spring on the firing-arm shaft), turning the lug into the timing-disc slot by rotation of the firing-arm shaft. A slot in the firing-arm shaft is swung around as the shaft turns, clearing a weighted pawl. The latter pawl or safety plate differs from that for Fuze Mk 18 type in having a weight assembled thereto. This pawl, the firing-pin safety assembly, moves outward from its normal position under the shoulder of the firing pin, partly due to centrifugal force and partly due to a camming action by the firing pin, allowing the latter to be driven downward by the firing-pin spring. Another safety feature, the firing-pin safety block, which is also in position under the shoulder of the firing pin when the fuze is at rest, will have already been swung out of the way (against its retaining spring) by centrifugal force, upon the firing of the projectile.

The firing pin, driven downward by its spring, strikes the fuze primer. Flash from the primer and a hollow black-powder relay pellet, which is included in the primer assembly, impinges on the magazine charge, which consists of forty or more grains of black powder in a plastic container located in the base of the fuze body. The pressure built up by the burning magazine charge is then transmitted through the bottom closing-disc assembly to the auxiliary detonating fuze. The Fuze Mk 42 is a moistureproofed fuze with the same sealing features of Fuze Mk 50.

Acceptance Test Data

Time Firing or Functioning Tests — Twenty sample fuzes from each lot are fired as follows:

(a) Ten fuzes from lots 1, 2, 3, 4, 6, 7, 8, 9, 11, etc., are fired in 8-in. HC projectiles.

(b) Five fuzes from lots 5, 25, 45, etc., are fired in 12-in. HC projectiles.

(c) Five fuzes from lots 10, 15, 20,—30, 35, 40, etc., are fired in 14-in. HC projectiles.

(d) Five fuzes from lots 5, 10, 15, 20, 25, 30, etc., are fired in 16-in. HC projectiles.

(e) In case HC projectiles are not available for the above tests, ten fuzes from each lot are fired in 5″/51 caliber guns with about 1100 f/s muzzle velocity. This will give setback and initial spin values slightly above those obtained in 16-in. guns with reduced charges. Ten additional fuzes from each lot are fired in 6″/53 or 6″/47 caliber guns at reduced charges. If HC projectiles are available for the tests above, the ten extra fuzes are fired in either 5″/51, 6″/53 or 6″/47 guns, at discretion of NPG.

Time settings to be used on the above sample fuzes are 5, 10, 20, 30, and 40 seconds. One fuze from each test sample is set at each of the above settings, with the exception of test samples (a) and (e) wherein two fuzes at each setting are used. Alternate lots for tests (a), (b), (c), and (d) are fired with service and reduced charges. The deviation of bursting time from setting time shall be less than 0.12 ± 0.0075 T seconds, where T is the set value. Acceptance for the lot is based on 80% satisfactory performance of all fuzes tested from the lot.

Safety Firing Test—Three fuzes from each lot are set on "safe" and fired in any 6-in. gun in the last third of its life at reduced charges. Whenever practicable, this should be done in 8-in. to 16-in. projectiles fired at service or near proof velocity. Functioning of any fuze is cause for rejection of the lot.

Markings on Fuze

Stamped on the side of the base are the following markings: Mech. Time Fuze Mk 42, Mod —; Manufacturer's Initials; Inspector's Initials, Lot Number.

Remarks

Large-caliber projectiles upon firing do not possess sufficient centrifugal force and setback to insure reliable functioning of the Time Fuze Mk 18 when used; thus it was considered necessary to develop the spring driven Fuze Mk 42.

The Fuze Mk 42, moistureproofed, includes the same sealing features used in moistureproofing of Fuzes Mk 50.

Chapter 22

AUXILIARY DETONATING FUZE MARK 43

General Data

Designation and Type

Auxiliary Detonating Fuze Mk 43

Projectiles Used In

HC	AA Common or HC
5″/54 cal.	6″/47 Dual Purpose

Overall Dimensions and Weight

Length ..... 3.18 in.
Body threads ..... 1.375-in.—20NS-2LH
Weight ..... 0.92 lb.

Material

Body ..... Steel
Closing plug ..... Steel or brass
Booster extension ..... Steel
Booster cap ..... Steel
Rotor block ..... Aluminum alloy
Rotor ..... Aluminum alloy
Firing pin holder ..... Brass
Base for rotor ..... Brass

Applicable OS 3421

General Arrangement Drawing No. 394538

Explosives Used

Detonator—Lead azide priming mixture, lead azide, tetryl
Lead-out of rotor—Tetryl
Lead-in—Tetryl
Booster—Tetryl

Description

The Fuze Mk 43 is identical to the Fuze Mk 54 except that instead of one booster pellet, two booster pellets in tandem are used and the booster cavity is lengthened by the use of a threaded extender. This makes the fuze correspondingly longer, so that it protrudes deeper into the projectile cavity. A booster cap and closing plug close the two ends of the fuze. The fuze body assembly houses the standard Fuze Mk 54 sealing cup assembly which includes the firing pin assembly, the rotor block assembly, and the base for the rotor.

The fuze is designed:

(1) To detonate the projectile explosive charge and thereby burst the projectile with high-order detonation instantaneously after the initiating explosive charge in the nose fuze is fired.

(2) To insure safety in transportation and stowage and to prevent detonation of the projectile in the gun should the initiating nose fuze function prematurely.

(3) Not to function or detonate when assembled in a projectile and then dropped nose-, side- or base-down from a height of 40 feet onto armor plate.

Operation

The fuze is assembled in the unarmed position and remains in this condition during transportation and stowage and until the projectile in which it is assembled is fired from a gun. When the projectile is fired from a gun, centrifugal force moves the firing

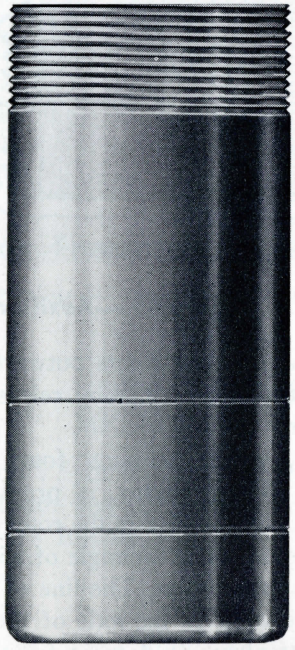

Figure 44.—Auxiliary Detonating Fuze Mk 43 Mod 1—Exterior View Full Size

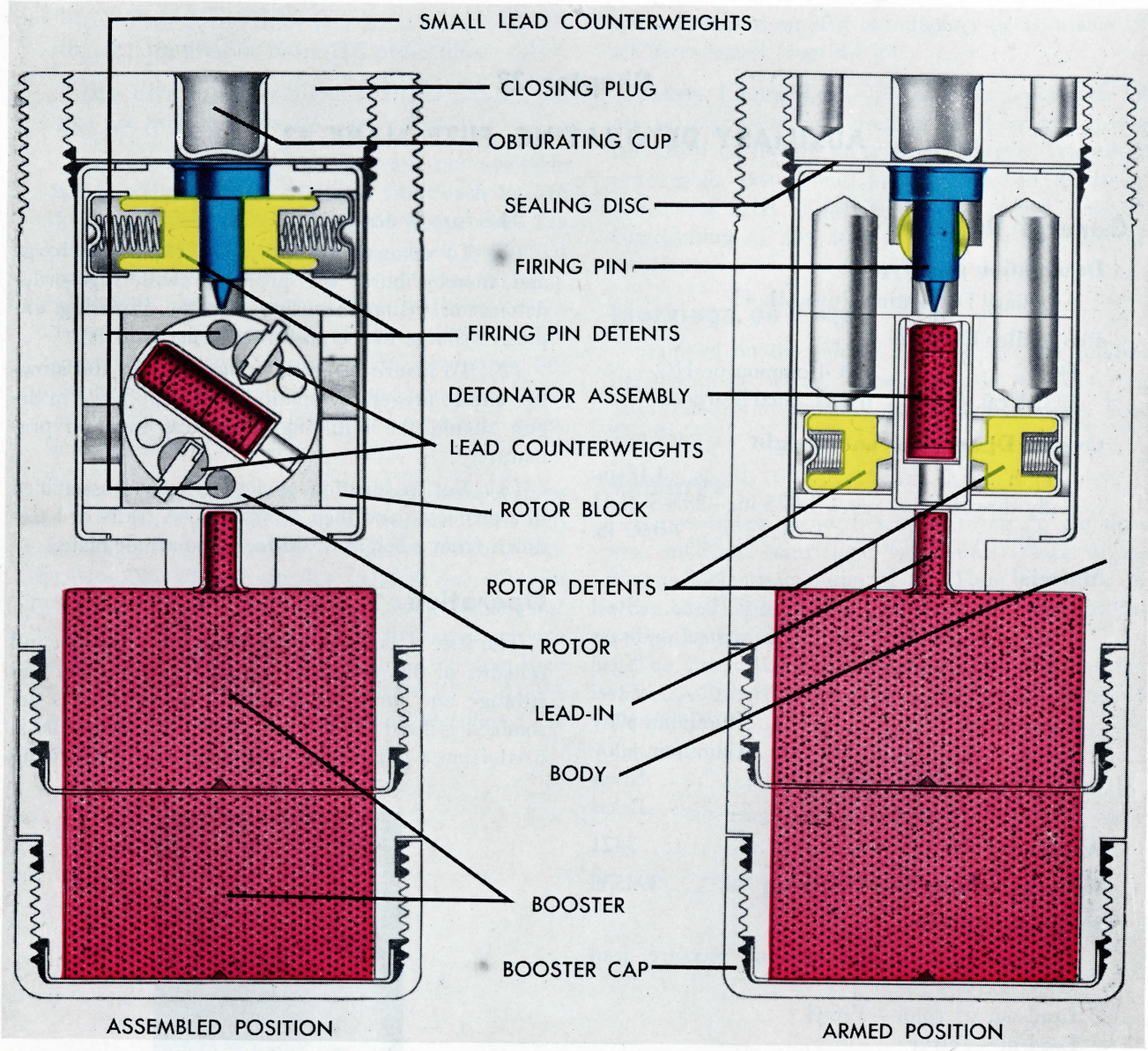

Figure 45.—Auxiliary Detonating Fuze Mk 43 Mod 1—Sectional View

pin detents and rotor detents outward, overcoming the holding forces and thereby releasing the firing pin and rotor.

The rotor, which contains four lead counterweights, and the detonator, is provided with two stop pins and is assembled in the rotor block with the axis of the detonator at an angle of 55 degrees from the long axis of the fuze. The line of the stop pins, being perpendicular to the axis of the detonator, is at an angle of about 35 degrees from the long axis of the fuze. The rotor is held in this (unarmed) position by the two rotor detents, the tapered ends of which engage in holes in the sides of the rotor. In this position the detonator element is safe, and, if the detonator were to be exploded, it would not detonate the booster. The rotor detents, on being moved outward by centrifugal force, withdraw from the holes in the rotor, permitting the counterweights to rotate the rotor until the detonator is in line with the booster lead-in and the firing pin, respectively. In this position the rotor is not in dynamic equilibrium but on account of the positions of the two small lead counterweights and the two empty holes, is tending to rotate further. Further rotation of the

rotor is prevented by the stop pins which press against the edges of the two holes, one placed in each side of the rotor housing. The purpose of this arrangement is to maintain a positive torque on the rotor, acting to hold it in the armed position throughout all motion of the projectile in flight. Fuzes of the Mk 43 type have the further advantage over the Mk 17 type of auxiliary detonating fuze in that they have an increased amount of arming energy, thus insuring that arming will take place even though the fuze is not exactly concentric with the axis of the projectile.

The rotor is now fully armed; the firing pin is released; and the fuze functions as follows: The gas pressure and/or shock wave from the action of the nose fuze forces the obturating cup down, shearing the firing pin sealing disc adjacent to the firing pin. The sharp-pointed firing pin is in turn thrust into the lead azide primer cap mixture of the detonator initiating it and, in turn, the booster lead-in and the booster.

Arming Spin

Both the firing pin detents and the rotor detents arm between 3000 and 4500 rpm in static spin tests.

Safety Features

The rotor assembly and firing pin are held in the unarmed position by their respective safety detents. The fuze is armed only by centrifugal force. One set of detents holds the firing pin and one set holds the rotor unit in the unarmed position. In addition, centrifugal force is necessary to cause the counterweights to carry the rotor to its armed position when the added friction due to setback has ceased. If the detonator should fire in the unarmed position it would not detonate the booster charge.

Acceptance Test Data

Bore Safety Test—Two completely live-loaded fuzes from the first lot, fortieth lot, and every fortieth lot thereafter are installed with "prearmed" point detonating fuzes in 5-in. projectiles. These projectiles are fired at near proof velocity against a wooden screen placed not more than two feet from the muzzle of the gun. If either one of the fuzes detonates on impact, the lot is rejected. In the event a lot is rejected, every subsequent lot shall be subjected to this test until 20 consecutive lots have passed.

Static Safety Test—Two completely live-loaded fuzes from the first lot, fortieth lot, and every fortieth lot thereafter are assembled with a suitable mechanical time fuze. With the rotor of the auxiliary detonating fuze in the unarmed position, the time fuze is fired for a safety test of the auxiliary fuze. If one or both of the auxiliary fuzes detonate, the lot is rejected. In the event a lot is rejected, every subsequent lot is subjected to this test, until 20 consecutive lots have passed.

Functioning Tests—Ten completely live-loaded fuzes from each lot (with the exception of the fifteenth lot and each fifth lot thereafter) are installed in 5-in. projectiles assembled with mechanical time fuzes, point detonating fuzes, or powder train fuzes of good quality. The auxiliary detonating fuze is assembled on the center of the axis of rotation of the projectile. Two of the projectiles are fired at proof or near proof pressure and the remainder fired at service pressure. Satisfactory performance for this test shall be 100% high-order functioning.

Ten completely live-loaded fuzes from each of the first ten lots and from every fifth lot thereafter (i.e., 15, 20, 25, etc.) are assembled with mechanical time fuzes, point detonating fuzes, or powder train fuzes of good quality. The auxiliary detonating fuze is located by means of an adapter 0.04-in. off the axis of rotation of the projectile. Two of the projectiles are fired at proof or near proof pressure and the rest at service pressure. Satisfactory performance for this test shall be 80% high-order functioning. In the event that the eccentric adapters are not available for this test, the ten fuzes are fired on center as specified in the above paragraph.

Markings on Fuze

The closing plug is stamped with the following data:

AUX.
DET. FUZE
MK 43 MOD —

Manufacturer's Symbol; Lot —; Symbol of Loading Plant; Month and Year of Loading; Anchor Sign; Inspector's Initials.

Remarks

This design of an auxiliary detonating fuze using a longer and larger booster was made necessary by the long streamlined shape of the 5"/54

caliber projectile. To insure consistent high-order detonation, it is advisable to have the fuze booster imbedded to the projectile filler as deeply as practicable.

The design of the Fuze Mk 43 Mod 0 differs from the Mod 1 only in that an elongated body is used instead of the Mk 54 type body with an extension. The Mod 1 will be the design produced, and N. O. P. Milledgeville will be the only manufacturer. All bodies and extensions are to be made of steel.

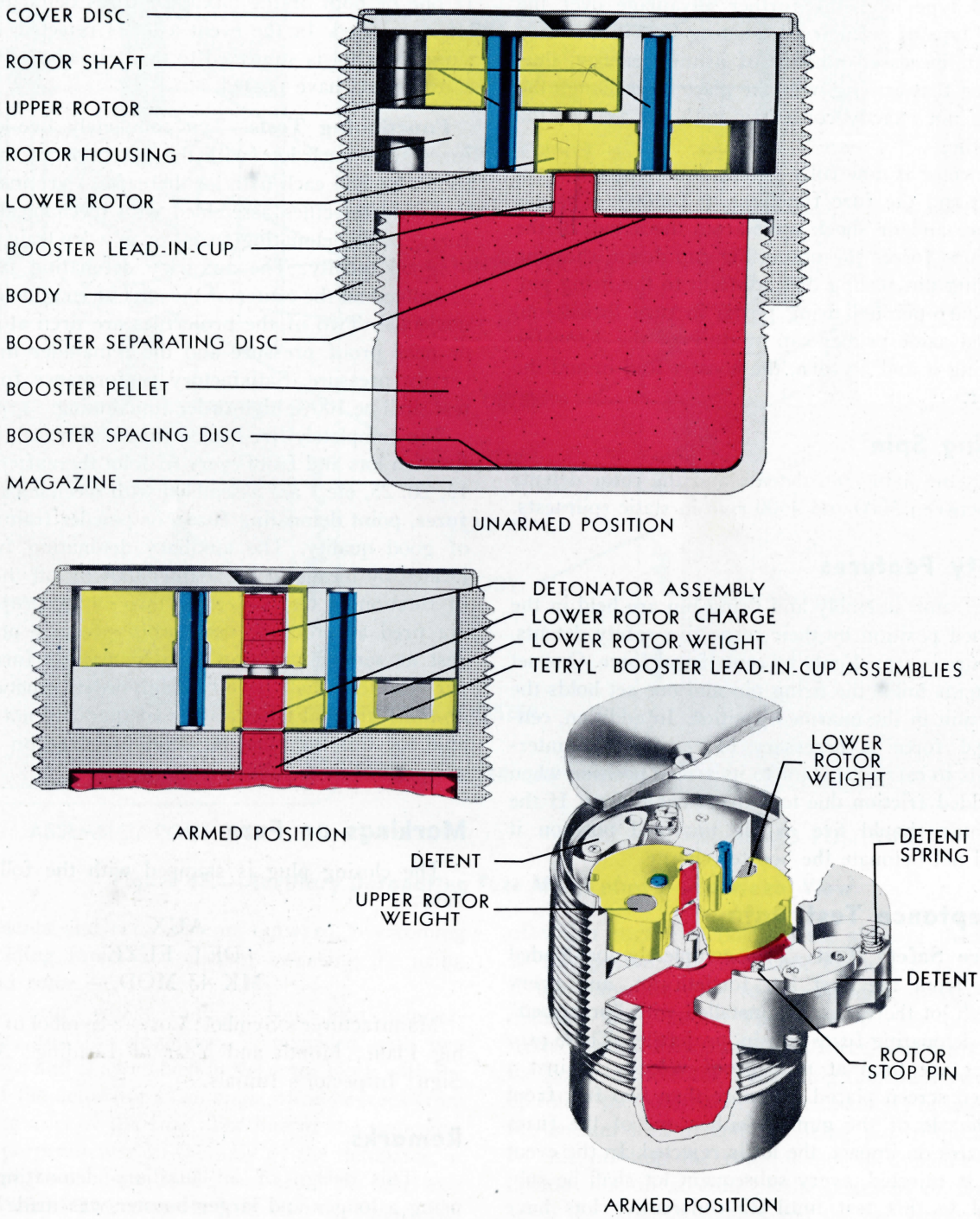

Figure 46.—Auxiliary Detonating Fuze Mk 44—Sectional View

Chapter 23

AUXILIARY DETONATING FUZE MARK 44

General Data

Designation and Type

Auxiliary Detonating Fuze Mk 44

Projectiles Used In

AA Common	AA	HC
5″/25 cal.	3″/50 cal.Mk 31	5″/54 cal.
5″/38 cal.		6″/47 cal. dual purpose

U. S. Army AA	Howitzers	British AA
90-mm	75-mm	
120-mm	105-mm	4.5-in.
	155-mm	5.25-in.
	8-in.	4.0-in.
	240-mm	4.7-in. (short)

Overall Dimensions and Weight

Length ..... 1.819 in.
Body threads ..... 1.5610-in.—20NS-2LH
Weight ..... 214 ± 5 gm.

Material

Body ..... Brass
Rotor housing ..... Mod 0 ..... Brass
Mod 1—Die cast zinc
Rotors ..... Aluminum
Magazine ..... Steel
Cover plate ..... Steel

Applicable OS 2985

General Arrangement Drawing No.... 388904

Explosives Used

Detonator—Lead azide and tetryl (compound type)
Lead-ins—Tetryl
Booster—Tetryl

Description

This fuze is of the twin rotor type, of which the main parts are: **booster magazine, fuze body, rotor housing, rotors, detents, and cover disc.** The design differs from other auxiliary fuzes such as the Mk 46 and Mk 54 in having no firing pin or primer mixture loading. It has two rotors each having its axis of rotation parallel to the axis of rotation of the fuze rather than perpendicular to it. This fuze requires a shock wave such as is produced by a detonator or blasting cap to initiate it rather than just gas pressure as is the case with auxiliary detonating fuzes of Mk 46 and Mk 54 types.

Operation

The fuze is assembled in the unarmed condition and remains so during transportation and storage. The two rotors are held by their respective detents with their explosive leads out of line with each other and with the booster. Upon firing in a gun, centrifugal force throws the detents outward, freeing the rotors. The latter, however, are prevented from turning by friction until setback force has been expended, after which they are rotated into the armed position by centrifugal force acting on the lead weights assembled in each rotor so that their ex-

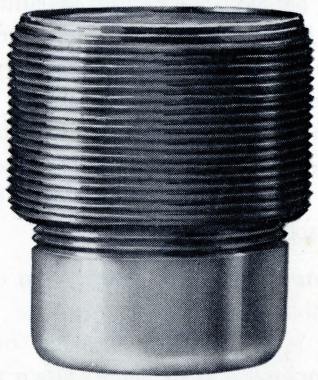

Figure 47.—Auxiliary Detonating Fuze Mk 44 Exterior View Full Size

plosive charges are in line with each other, with the booster lead-in, and with the central hole of the cover disc. Fuzes of the Mk 44 type have the advantage of being unusually tolerant of eccentric spin. Arming will take place even though the fuze is not exactly concentric with the axis of the projectile.

The fuze functions when the detonating nose fuze fires, transmitting its detonation through the cover disc to the lead azide and tetryl of the upper rotor detonator. This in turn detonates the lead-in charge in the lower rotor, the booster lead-in, the tetryl booster charge, and finally the burster charge of the projectile.

Arming Spin

The rotors arm at 3000-4500 rpm in static spin tests. The arming spin test at 3000 rpm is conducted on-center; while the spin test for arming at 4500 rpm is conducted in an off-center check at an eccentricity of 0.125 in.

Safety Features

Safety is provided by the fact that the two rotors must be in line before the booster charge can be fired. When the loaded fuze is assembled with detonator and rotor lead-in locked out of line with each other and with the booster lead-in, even though one or both rotor explosive charges were to be exploded, the booster charge would not be detonated. Tests have also shown fuze safety even if one or the other rotor is completely armed; provided one rotor remains in the same position.

Ballistic Acceptance Tests

Static Safety Test—Two fuzes from every fortieth lot shall be assembled with a suitable adapter with a time fuze and given a safety test by firing the time fuze, the rotors of the auxiliary detonating fuze being in the unarmed position. Neither the detonator rotor lead-in, lead-in, nor booster shall function under these conditions. If either fuze fails this test, the preceding four lots shall be subjected to this test also.

Functioning Test—Ten fuzes from every lot are tested, assembled in standard service loaded projectiles with ignition fuzes capable of firing the auxiliary detonator and of such known performance that failure of the projectile to burst before impact may be considered a failure of the auxiliary detonating fuzes being tested. Ordinarily all auxiliary detonating fuzes will be located on the axis of rotation of the projectile and must function as high-order detonations when initiated by the time fuzes. Two rounds are fired at near proof pressure. At least 90% performance is required.

At the discretion of BuOrd, ten fuzes from any lot are assembled, by means of a proper adapter, ⅛-in. off the axis of rotation of the projectile and tested as before, two rounds being fired at near proof pressure. At least 80% performance is required. Failure of this test is sufficient cause for consideration by BuOrd of the acceptability of other lots on which the off-center test was not required. In the event of any lot failing an off-center or an on-center test, twenty additional fuzes from that lot are fired in the same manner and acceptance based on the same percentages as before, for all thirty, i.e., 90% for the on-center and 80% for the off-center tests.

Markings on Fuze

The following data appear on the booster cap: Auxiliary Detonating Fuze Mk 44, Mod —; Manufacturer's Symbols; Lot —; Initials of Loading Plant; Month and Year of Loading; Anchor Stamp; Inspector's Initials.

Remarks

This fuze is currently used, and only with nose fuzes not covered in this OP. The Fuze Mk 44 Mod 0 has a machined brass rotor block with pressed-fit steel stop pins. Fuzes Mk 44 Mod 1, of early lots have a zinc die-cast rotor holder with pressed-fit rotor stop pins. The later lots of Fuzes Mk 44 Mod 1 have a zinc die-cast rotor block with integral case stop pins.

In the Fuze Mk 44 Mod 2 a 0.136-in. diameter hole has been drilled through the center of the top cover and a 0.002-in. thick copper disc crimped over the top cover to seal it. This fuze is used in spin-stabilized rockets in conjunction with the Army Nose Fuze M51A2 Type. This modification was necessary because the Army Nose Fuze M51A2, when set on delay, is unable to puncture the top cover of the Mod 1 design.

Chapter 24

AUXILIARY DETONATING FUZE MARK 46

General Data

NOTE: The Mk 46 and Mk 35 differ only in the strength of the detent springs. Those of the Mk 35 are weakened to make the latter fuze suitable for major-caliber low-spin projectiles.

Designation and Type

Auxiliary Detonating Fuze Mk 46, Mods 0 & 1

Projectiles Used In

AA	AA Common	HC
3″/23 cal.	5″/25 cal.	4″/50 cal.
3″/50 cal.	5″/38 cal.	5″/51 cal.
		6″/53 cal.
		6″/47 cal. (Sp)

Overall Dimensions and Weight

Length ..... 2.50 in.
Body threads ..... 1⅜-in.—20NS-2LH
Weight ..... 0.77 lb.

Material

Body ..... Steel
Closing plug ..... Steel or brass
Booster cap ..... Steel
Rotor block ..... Aluminum alloy
Rotor ..... Aluminum alloy
Firing pin holder ..... Brass
Base for rotor ..... Brass

Applicable OS .Use OS 2104 (where pertinent)

General Arrangement Drawing No.
329950, Rev. E.

Explosives Used

Primer cap—Fulminate of mercury cap mixture
Detonator—Fulminate of mercury and tetryl
Booster lead-in—Tetryl
Booster—Tetryl

Description

The fuze is composed of a one-piece body with a booster cap and plug closing the respective ends. The body assembly houses the firing pin assembly, the rotor block assembly, and the base for the rotor. The fuze is designed:

(1) To detonate the projectile explosive charge and thereby burst the projectile with high-order detonation instantaneously after the initiating explosive charge in the nose fuze is fired.

(2) To insure safety in transportation and stowage and to prevent detonation of the projectile in the gun should the initiating nose fuze function prematurely.

(3) Not to function or detonate when assembled in a projectile and then dropped nose-, side-, or base-down from a height of 40 feet onto armor plate.

Operation

The fuze is assembled in the unarmed position and remains in this condition during transportation and stowage and until the projectile in which it is as-

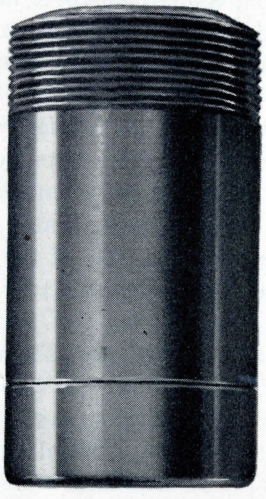

Figure 48.—Auxiliary Detonating Fuze Mk 46 Exterior View Full Size

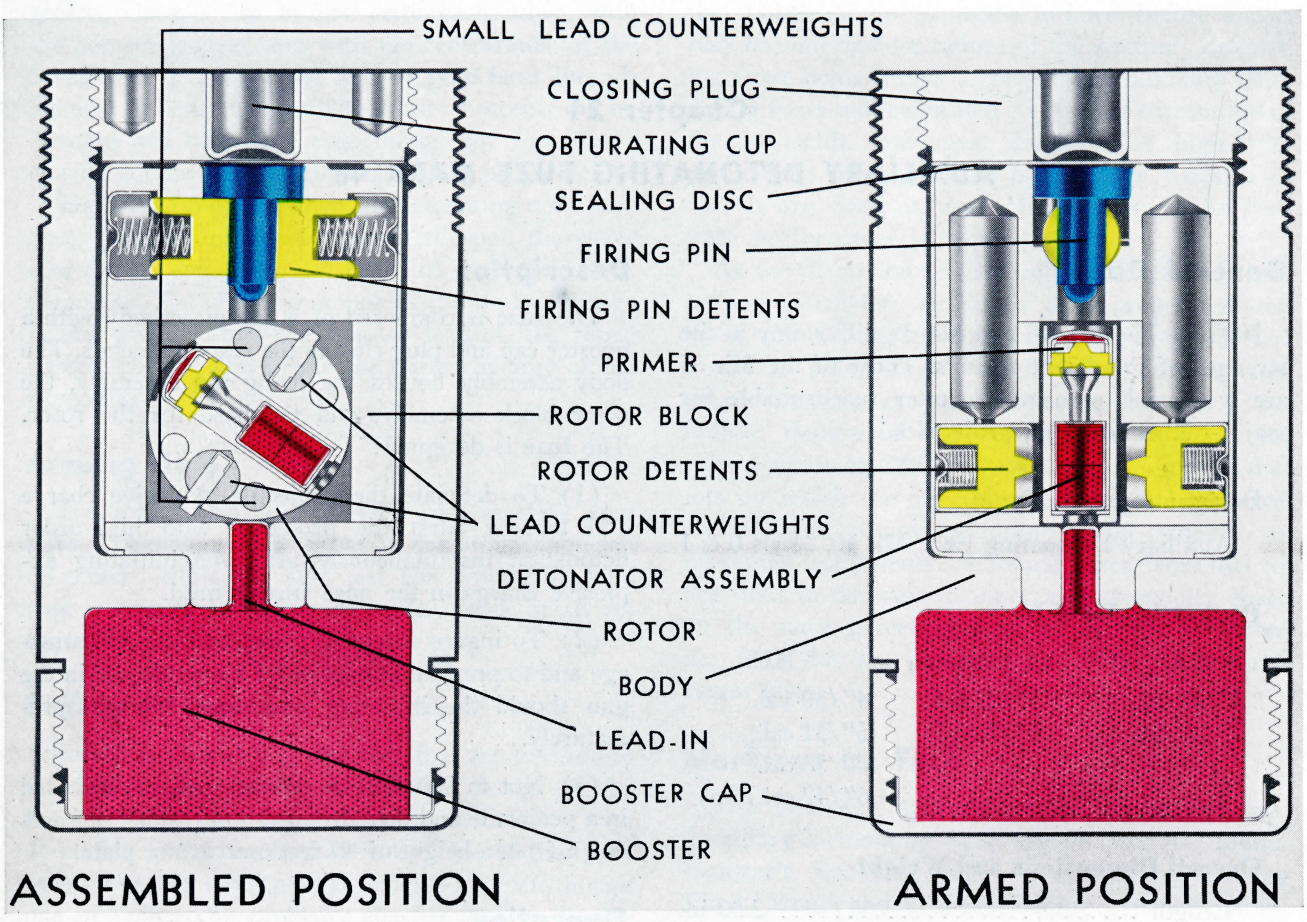

Figure 49.—Auxiliary Detonating Fuze Mk 46—Sectional View

sembled is fired from a gun. When the projectile is fired from a gun, centrifugal force moves the firing pin detents and rotor detents outward, overcoming the holding forces and thereby releasing the firing pin and rotor.

The rotor, which contains four lead counterweights, the primer, and the detonator, is provided with two stop pins and is assembled in the rotor block with the axis of the detonator at an angle of 55 degrees from the long axis of the fuze. The line of the stop pins, being perpendicular to the axis of the detonator, is at an angle of about 35 degrees from the long axis of the fuze. The rotor is held in this (unarmed position) by the two rotor detents, the tapered ends of which engage in holes in the sides of the rotor. In this position the detonator element is safe and if the detonator were to be exploded it would not detonate the booster. The rotor detents, on being moved outward by centrifugal force, withdraw from the holes in the rotor, permitting the counterweights to rotate the rotor until the detonator and primer are in line with the booster lead-in and the firing pin, respectively. In this position the rotor is not in dynamic equilibrium but, due to the positions of the two smaller lead counterweights and the two empty holes, is tending to rotate further. Further rotation of the rotor is prevented by the stop pins which press against the edges of the two holes, one placed in each side of the rotor housing. The purpose of this arrangement is to maintain a positive torque on the rotor, acting to hold it in the armed position throughout all motion of the projectile in flight. Fuzes of Mk 46 type have the further advantage over the Mk 17 type of auxiliary detonating fuze in that they have an increased amount of arming energy, thus insuring that arming will take place even though the fuze is not exactly concentric with the axis of the projectile.

The rotor is now fully armed; the firing pin is released and the fuze functions as follows: The gas pressure and/or shock wave from the action of the nose fuze forces the obturating cup down, shearing the firing pin sealing disc adjacent to the firing pin. The firing pin is, in turn, forced against the primer cap and anvil, which actuates the detonator, the booster lead-in, and the booster.

Arming Spin

Both the firing pin detents and rotor detents arm between 3000 and 4500 rpm in static spin tests.

Safety Features

The rotor assembly and firing pin are held in the unarmed position by their respective safety detents. The fuze is armed only by centrifugal force. One set of detents holds the firing pin and one set holds the rotor unit in the unarmed position. In addition, centrifugal force is necessary to cause the counterweights to carry the rotor to its armed position when the added friction due to setback has ceased. If the detonator should fire in the unarmed position, it would not detonate the booster charge.

Ballistic Acceptance Tests

Sample fuzes are chosen at random from the preliminary and from each production lot and subjected to routine safety tests and ballistic tests as follows:

Flight Test: Two fuzes are assembled in service-loaded projectiles with dummy time fuzes and fired from a gun. The fuzes must not function to explode the bursting charge during flight.

Functioning Test: Five fuzes from each lot are assembled in 5-in. projectiles, each with a nose fuze of proven high quality and fired. Acceptance of the lot is based on 100% high-order detonations of all projectiles tested. No prematures attributable to this fuze are allowed.

From each lot an additional five fuzes are assembled in measured (concentric within 0.010-in.) 5″/38 caliber projectiles, "D" loaded to a density of 1.42, with special eccentric adapters with an eccentricity of 0.040-in. Time Fuzes Mk 18 Type of proven high quality are used with the auxiliary detonating fuzes. Acceptance is based on 80% high-order detonations of all projectiles tested. No prematures attributable to this auxiliary fuze are allowable. In the event of failures, ten fuzes from each lot are retested in each of the two tests outlined above.

Markings on Fuze

On closing plug, the following data are stamped:

AUX.
DET. FUZE
MK 46

LOT NO. —; followed by Initial of Loading Plant; Manufacturer's Symbol; Anchor Sign; Year and Month of Loading; and Inspector's Initials.

Remarks

The design of the Fuze Mk 46 (originally Mk 17 Mod 8-11 inclusive) was adopted to replace the Mk 17 primarily because it arms more reliably when mounted off-center, simulating conditions in an unsymmetrical projectile or one which is not spinning exactly about its own axis in flight. The stop pins on the rotor also assure that the detonator will be exactly lined up with the firing pin and the booster lead-in, which is not strictly true in the Mk 17 design because the position of equilibrium is also that of zero torque.

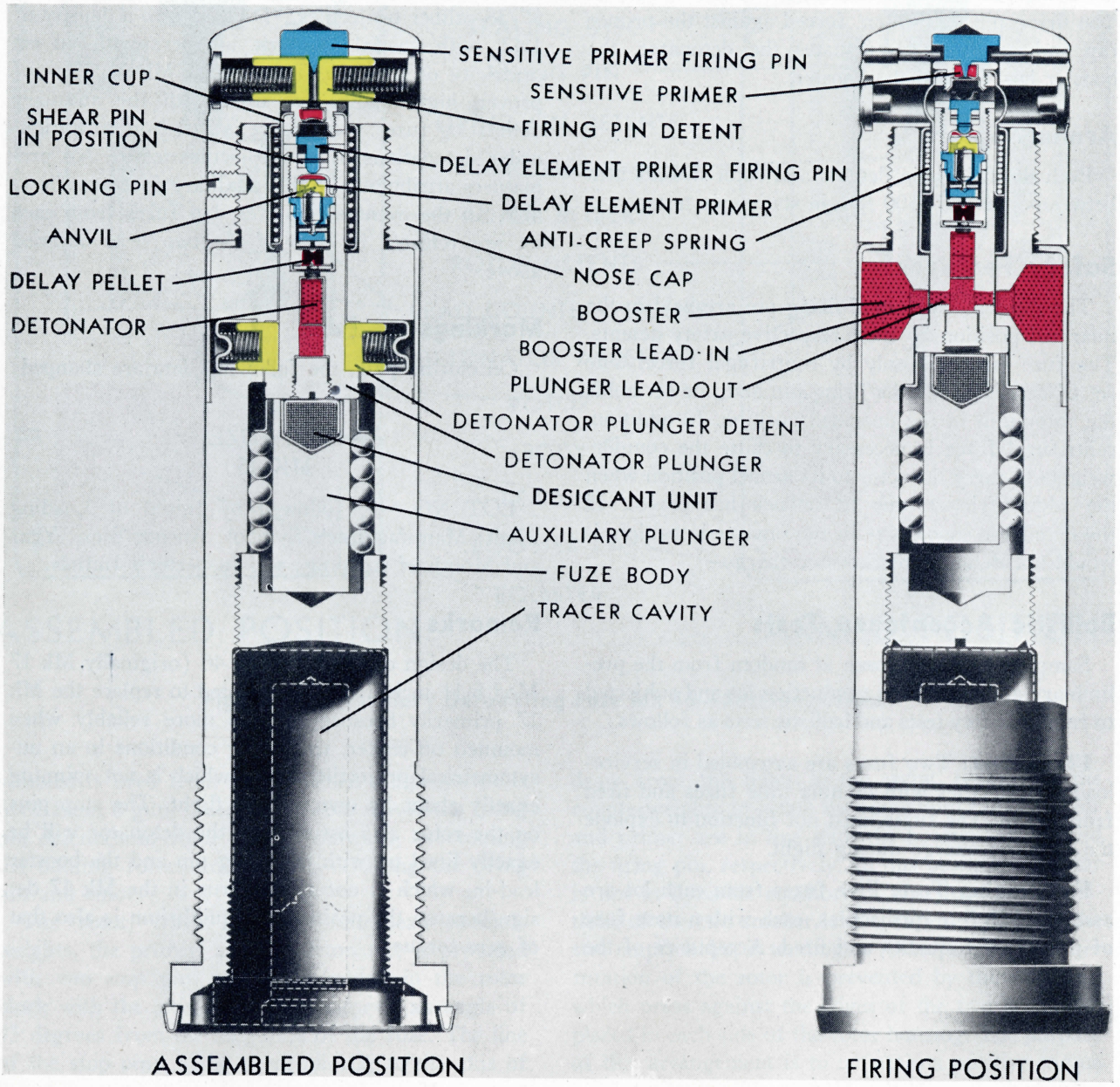

Figure 50.—Base Detonating Fuze Mk 48—Sectional View

Chapter 25

BASE DETONATING FUZE MARK 48

General Data

NOTE: The Fuzes Mk 39 and Mk 48 differ from each other only in that the Mk 48 contains an 0.01-second delay element. The Mk 39 does not.

Designation and Type

Base Detonating Fuze Mk 48 Mod —

Projectiles Used In

8″, 12″, 14″, and 16″ HC

Overall Dimensions and Weight

Length	6.75 in.
Body thread length	1.09 in.
Body threads	1½-in.—12NF-3LH
Weight	1.88 ± 0.09 lb.

Material

Body	Pearlitic manganese steel
Detonator plunger	Pearlitic manganese steel
Nose cap	Aluminum alloy

Applicable OS

(Not yet prepared) Use 897 and 2506, where pertinent

General Arrangement Drawing No.

Mk 48 Mod 0	206248
Mk 48 Mod 1	422712

Explosives Used

1 Sensitive primer cap—Fulminate of mercury cap mixture (includes potassium chlorate and antimony sulphide)
1 Delay primer cap—Fulminate of mercury cap mixture (includes potassium chlorate and antimony sulphide)
1 Delay element (0.01 second)—Black powder
1 Detonator—Lead azide
1 Detonator plunger load—Tetryl
2 Plunger lead-outs—Tetryl
2 Booster lead-ins—Tetryl
2 Boosters—Tetryl

Description

The Fuze is composed of two major parts, namely, the fuze body and the nose cap. The fuze body contains the plunger retaining plug, the auxiliary plunger assembly, the detonator plunger assembly, detents, anti-creep spring assembly, and two side-wall boosters protected by a booster cover.

The nose cap, which is screwed onto the forward end of the fuze body, houses the sensitive firing pin and detents. A locking pin is provided to lock the nose cap in position after final assembly at the loading plant. The fuze is moistureproofed by the application of a lacquer plus a final coat of Bakelite varnish. The base of the fuze is fitted to receive a tracer.

Operation

The fuze is assembled in the unarmed position. All components of the fuze remain in this position during transportation, in storage, and until after the fuzed projectile is fired from the gun. After the projectile leaves the muzzle of the gun, the detonator plunger detents and the sensitive firing-pin detents are forced outward by centrifugal force against their spring pressure and friction. This does not occur in the bore of the gun, because the side-wall friction forces due to acceleration are greater than the centrifugal forces. Also, the sensitive firing pin is slightly movable and at setback binds against the sensitive firing pin detents, holding them in the safe position. Close outside the muzzle, where the acceleration ceases, the side-wall friction drops off sharply and radially movable parts (detents) snap outward under pressure of the continuous centrifugal force. The detonator plunger is now unlocked but is retained in the safe (rearward) position during flight by the resistance of the anti-creep spring which acts against the flanged end of the inner anti-creep spring cup attached to the detonator plunger. Since the sensitive firing pin detents have been thrown out of the way, the sensitive firing pin is free to be impinged upon by the sensitive primer cap held in the

detonator plunger, immediately upon impact of the projectile. At this time the detonator plunger, aided by the momentum of the auxiliary plunger on its ball bearings, continues forward, impinging the sensitive primer cap onto the sensitive firing pin. The gas pressure from the explosion of the sensitive primer cap drives the round-pointed plunger firing pin against the delay primer cap, while at the same time these gases pass through the port holes on the side of the primer container and build up a high pressure within the inner cup for the anti-creep spring, expanding that part of the cup which is adjacent to the drilled holes in the nose cap. The bulging of the inner cup for the anti-creep spring locks the detonator plunger in the forward firing position. In this firing position the lead-out holes in the plunger are in alignment with the booster lead-in holes. The firing of the detonator plunger delay primer cap in turn ignites the black powder delay element (0.01 second), which then actuates the detonator, two plunger lead-outs, two booster lead-ins, two boosters, and the projectile bursting charge.

Arming Spin

The fuze becomes armed shortly after leaving the muzzle. Detents are required to arm in static spin tests between 1200 and 1400 rpm.

Safety Features

The safety detent mechanisms are armed only by centrifugal force of a relatively high magnitude. Two sets of detents, one to prevent the sensitive primer from impinging on the sensitive firing pin, and the other set for holding the detonator plunger in tthe safe rearward position, insure that all four detents will not become accidentally withdrawn at the same time. Furthermore, the fuze is "detonator safe." That is, when the fuze is in the safe position (plunger rearward), and the detonator is set off by any cause, the force of the detonator is dissipated and the booster will not be detonated.

Sensitivity Limits

In all calibers from 8-in. to 16-in. at 20 to 30 degrees obliquity and 1500 f/s striking velocity the fuze will usually function on STS plate with a thickness of e/d equal to 0.07 or greater. "e" is the slant thickness of the plate (thickness divided by cosine of the obliquity) and "d" is the projectile diameter in inches. At 60 to 65 degrees obliquity, the fuze appears to be at least as sensitive as it is at lower obliquities. Data are insufficient to determine whether or not the sensitivity limit is affected appreciably by the striking velocity.



Figure 51.—Base Detonating Fuze Mk 48 Exterior View Full Size

Acceptance Test Data

Sample fuzes chosen at random from each production lot are subjected to the following routine safety tests and to various ballistic tests in 8-in. to 16-in. HC projectiles:

Ballistic Tests—Firing tests are conducted in 8-in. or larger caliber HC projectiles with steel nose plugs and without auxiliary detonating fuzes assembled in the projectiles. Acceptance is based on NPG's recommendations

Lot	Caliber	No. of rounds	Target
1, 2, 3, 6, 7, 8, 11, 12, 13, etc.	8″	3	½″ to 2½″ STS at penetrative striking velocities from minimum range table SV to service velocity, and obliquities up to 40 degrees.
4, 9, 14, etc.	12″ to 14″	3	Same as above excepting plates vary from 1″ up to slightly less than proj. limit.
5, 10, 15, etc.	16″	3	Same as for 12″ & 14″ except plates shall start 1½″
1, 6, 11, 16, etc.	8″ to 16″		Ground impact at non-ricochet angles

Flight test is conducted at near proof, or proof velocity in 8-in. to 16-in. projectiles at the maximum practical range. Three fuzes are chosen from lots 2, 22, 42, etc. Special testing is not desirable; flight testing being carried out along with other routine tests.

Because of the scarcity of 8-in. to 16-in. projectiles, NPG is authorized to test Fuzes Mk 48 in 5″/51 caliber guns with a one-in.-35 twist, and using a M.V. up to 1100 f/s. Firing tests are conducted in 5″/51 projectiles assembled with steel nose plugs and without auxiliary detonating fuzes, as follows:

Test	No.	Type of impact
A	5	¼″ to ⅜″ mild steel at 0° obliquity
B	5	¼″ to ⅜″ mild steel at 45° obliquity
C	10	Sand, earth or rubble at non-ricochet angles
D	5	Reinforced concrete (any thickness) 0° to 45° obliquity

Conducted as follows:

All lots: Test A, B, and C
Every 5th lot: Test D

Acceptance is based on 80% high-order detonations within 25 ft. behind plates and high-order functioning anywhere on other impacts. Testing with 5″/51 caliber projectiles is used only as a temporary expedient, and only when 8-in. to 16-in. HC projectiles are not available.

Markings on Fuze

Around the exposed base of the fuze body the following data are stamped on each fuze: Mk 48 Mod —; Lot —; Loading Plant's Initials; Year and Month of Loading; Inspector's Initials; Anchor Sign; Inert Parts Manufacturer's Initials.

Remarks

The Fuze Mk 48 superseded the non-delay Fuze Mk 39 when tests indicated that a slight delay gave better overall destructive effect with major caliber HC projectiles than with the non-delay fuze. The Fuzes Mk 48 Mod 0 Mod 1 are the moistureproofed designs as described for the Fuze Mk 28 Mod 15. All fuzes of the Mk 48 type are loaded at Naval Torpedo Station, Newport, using inert parts manufactured there and at various commercial sources. Arrangements are underway to have these fuzes manufactured at N. O. P. Milledgeville, Ga., for loading at N. O. P. Macon, Ga.

Chapter 26

MECHANICAL TIME FUZE MARK 50

General Data

Designation and Type

Mechanical Time Fuze Mk 50 Mods 0, 1, 2, and 3

Projectiles Used In

Illum.	AA Common	HC
4″/50	5″/25	5″/51
5″/25	5″/38	6″/47 (Single purpose)
5″/38		6″/53
5″/51		8″/55
6″/47		
6″/53		

Overall Dimensions and Weight

Length ..... 4.313 in.
Body threads ..... 1.70-in.—14NS-1RH
Weight ..... 2.28 ± 0.06 lb.

Material

Body ..... Brass
Lower cap ..... Brass
Upper cap ..... Zinc

Applicable OS 3645

General Arrangement Drawing No.

(Not yet prepared)

Explosives Used

Primer cap contains either F.A. 70 primer mixture consisting of potassium chlorate, antimony sulphide, TNT and lead sulfocyanate, or the F.A. 70 primer mixture modified to contain 8% ground glass. Magazine charge consists of not less than 40 grains of black powder in a moistureproof plastic container. This is the same as for the Fuze Mk 18.

Description

The description of the Fuze Mk 18 in this OP is equally applicable to the Fuze Mk 50. The Mk 50 differs from the Mk 18 only in that it is a moistureproof design intended to give longer life and greater reliability than the Mk 18. The moistureproofing is accomplished as follows:

(a) The Fuze Mk 50 contains an internal desiccator unit of silicia gel in the base cavity of the fuze body. This silica gel absorbs and retains all moisture in the air entrapped in the fuze at assembly, thus preventing rusting of steel parts or deterioration of explosive components.

(b) Special gaskets are inserted between the upper cap and the lower cap, and also between the lower cap and the body, to hinder the entrance of moisture.

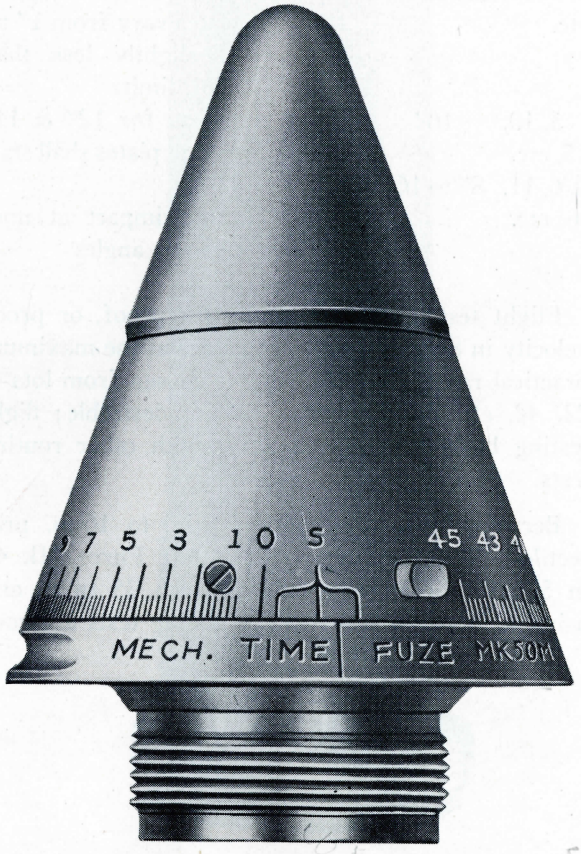

Figure 52.—Mechanical Time Fuze Mk 50 Exterior View Full Size

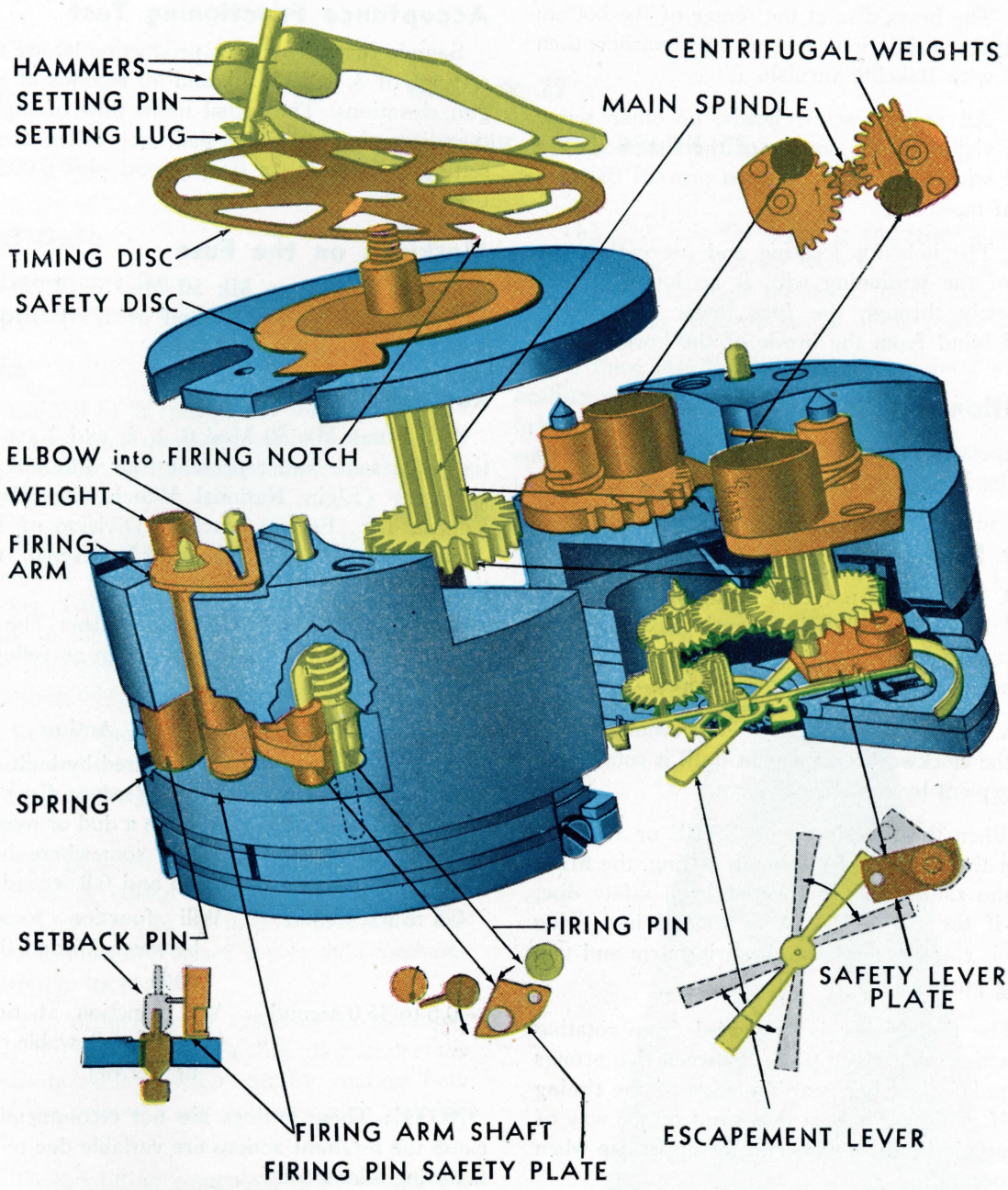

Figure 53.—Mechanical Time Fuze Mk 50—Sectional View

(c) The gasketed joint between the upper and lower caps is coated externally with Bakelite varnish. This film of varnish is practically impervious to moisture, hence serves as a mechanical barrier to its passage.

(d) The primer screw assembly is moisture-proofed by inserting a vinylite disc under the black-powder relay pellet and by coating both ends of the primer screw assembly with Bakelite varnish.

(e) Thread luting compound is applied to the joint between the body and the bottom closing screw, serving to exclude moisture and keep the joint mechanically tight.

(f) The brass disc at the center of the bottom closing screw is crimped in under a washer, then coated with Bakelite varnish.

(g) All tension screw heads, or other screw heads, visible on the outside of the fuze body are coated with a glyptal lacquer to prevent the passage of moisture.

(h) The hole for locating and preventing any shift of the tensioning wire is no longer drilled completely through the fuze lower cap, but is drilled blind from the inside of the lower cap.

Operation

The operation of this fuze is exactly the same as that of the Mechanical Time Fuze Mk 18 Type.

Safety Features

(a) A setback pin prevents rotation of the firing arm and hence tripping of the spring-loaded firing pin through a connecting linkage until the setback pin is moved rearward by setback force.

(b) A spring-loaded safety lever prevents oscillation of the clockwork escapement until it rotates out of engagement by centrifugal force.

(c) When the fuze is set on SAFE or anything less than the prescribed minimum setting, the firing slot in the timing disc is covered by a safety disc, so that if the timing disc were rotated into firing position it could not release the firing arm and trip the firing pin.

(d) The timing disc is prevented from rotating by the setting pin, which passes between two prongs of a raised forked lug near the edge of the timing disc itself. This lug is bent down out of the way of the setting pin by the hammer in the upper cap when setback occurs.

Acceptance Functioning Test

Sample fuzes from each production lot are fired at settings of 3, 10, 15, 30, and 40 seconds at various gun elevations. The actual mean time of flight and the dispersion obtained shall not differ from the setting by more than 0.08 second plus 0.005 times the setting.

Markings on the Fuze

Mech. Time Fuze Mk 50 Mod 0 (1, 2, or 3); Initials of Manufacturer and of Navy Inspector; Lot No. —.

Remarks

(a) Fuzes Mk 50 Mod 0, 1, 2, and 3 are essentially the same and represent four different manufacturers (Elgin National Watch Co., Thos. A. Edison, Inc., Eclipse Machine Division of Bendix Aviation Corp., and Frankford Arsenal, respectively).

(b) Time Setting Characteristics: The Fuzes Mk 50 Mod 0, 1, 2, and 3 function as follows for various settings:

Setting	Action
Safety zone to and including 0.0 second	Dud caused by built-in feature (safety disc)
*0.0 to 0.3 second	May be a dud or may function somewhere between 0.6 and 0.8 second
0.3 to 0.6 second	Will function somewhere between 0.6 and 0.8 second
0.6 to 45.0 second	Will function at time set (within allowable calibration error)

***NOTE:** These settings are not recommended because the resultant actions are variable due to manufacturing tolerances.

Chapter 27

MECHANICAL TIME FUZE MARK 51

General Data

Designation and Type

Mechanical Time Fuze Mk 51 Mod —

Remarks

The Fuze Mk 51 is identical to the Fuze Mk 22 in construction and operation, except that it has been waterproofed in the same manner as the Fuze Mk 50 as follows:

(a) The Fuze Mk 51 contains an internal desiccator unit of silica gel in the base cavity of the fuze body. This silica gel absorbs and retains all moisture in the air entrapped in the fuze at assembly, thus preventing rusting of steel parts or deterioration of explosive components.

(b) Special gaskets are inserted between the upper cap and the lower cap, and also between the lower cap and the body, to hinder the entrance of moisture.

(c) The gasketed joint between the upper and lower caps is coated externally with Bakelite varnish. This firm of varnish is practically impervious to moisture, hence serves as a mechanical barrier to its passage.

(d) The primer screw assembly is moisture-proofed by inserting a vinylite disc under the black-powder relay pellet and by coating both ends of the primer screw assembly with Bakelite varnish.

(e) Thread luting compound is applied to the joint between the body and the bottom closing screw, serving to exclude moisture and keep the joint mechanically tight.

(f) The brass disc at the center of the bottom closing screw is crimped in under a washer, then coated with Bakelite varnish.

(g) All tension screw heads, or other screw heads, visible on the outside of the fuze body are coated with a glyptal lacquer to prevent the passage of moisture.

(h) The hole for locating and preventing any shift of the tensioning wire is no longer drilled completely through the fuze lower cap, but is drilled blind from the inside of the lower cap.

The Fuze Mk 51 Type also incorporates a modification not present in Fuzes Mk 22. The tensioning wire between the lower cap and body is a plain ended wire surface doing away with the hooked ended wire of other types. Because of this modification, the fuze has had an extra stop screw hole drilled in the lower cap.



Figure 54.—Mechanical Time Fuze Mk 51 Exterior View Full Size

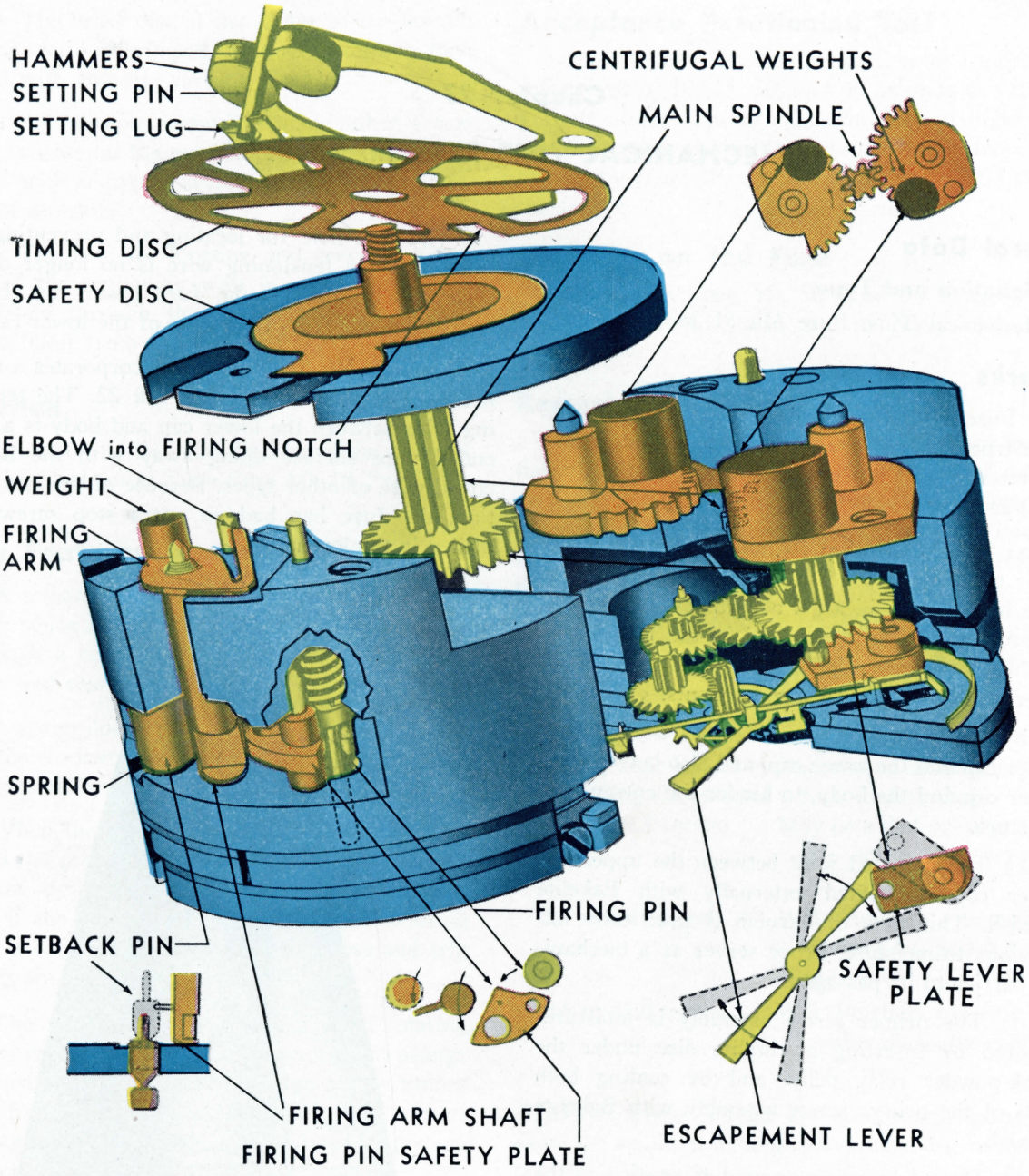

Figure 55.—Mechanical Time Fuze Mk 51—Sectional View

Safety Features

(a) A setback pin prevents rotation of the firing arm and hence tripping of the spring-loaded firing pin through a connecting linkage until the setback pin is moved rearward by setback force.

(b) A spring-loaded safety lever prevents oscillation of the clockwork escapement until the safety lever has been rotated out of engagement by centrifugal force.

(c) When the fuze is set on "safe" or anything less than the prescribed minimum setting, the firing slot in the timing disc is covered by a safety disc, so that if the timing disc were rotated into firing position it could not release the firing arm and trip the firing pin.

(d) The timing disc is prevented from rotating by the setting pin, which passes between two prongs of a raised forked lug near the edge of the timing disc itself. This lug is bent down out of the way of the setting pin by the hammer in the upper cap when setback occurs.

Acceptance Functioning Test

Sample fuzes from each production lot are fired at settings of 3, 10, 15, 20, and 25 seconds at various gun elevations. The actual mean time of flight and the dispersion obtained shall not differ from the setting by more than 0.08 second plus 0.005 times the setting.

Markings on Fuze

Mech. Time Fuze Mk 51, Mod —; Manufacturer's Initials; Inspector's Initials; Lot No. —.

Time Setting Characteristics

The Fuzes Mk 51 and Mods function as follows for various settings:

Setting	Action
Safety zone to and including 0.3 second	Dud caused by built-in feature (safety disc)
*0.3 to 0.6 second	May be a dud or may function somewhere between 0.6 and 0.8 second
0.6 to 30.0 seconds	Will function at time set (within allowable calibration error)

***NOTE:** These settings are not recommended because the resultant actions are variable on account of manufacturing tolerances.

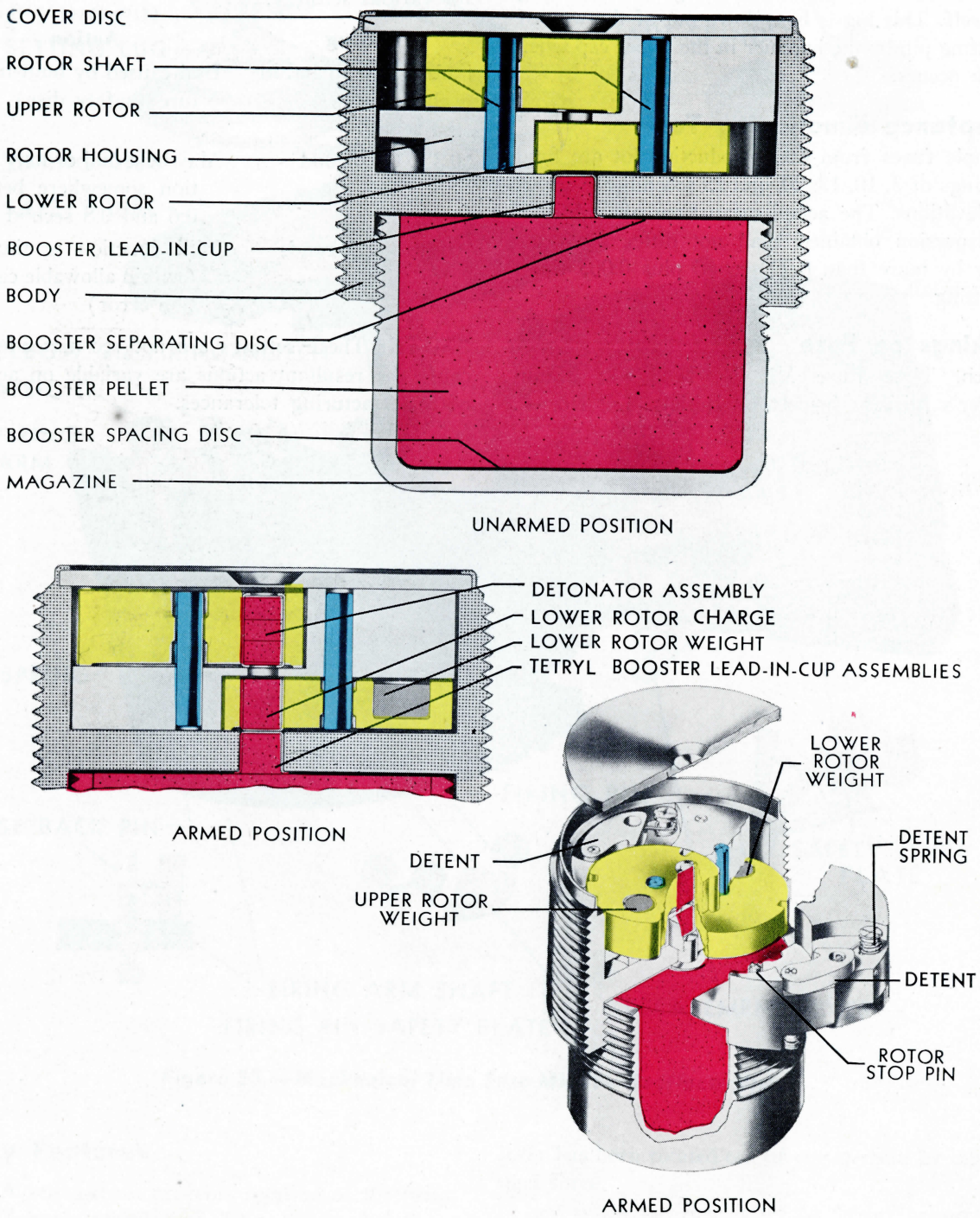

Figure 56.—Auxiliary Detonating Fuze Mk 52—Sectional View

Chapter 28

AUXILIARY DETONATING FUZE MARK 52

General Data

Designation and Type

Auxiliary Detonating Fuze Mk 52 Mod 0

Projectiles Used In

8″, 12″, 14″, 16″ HC

Applicable OS . . . Use OS 2985 where pertinent

General Arrangement Drawing No. 438570

Arming Spin

The rotor detents and rotors arm between 1600 and 1900 rpm.

The Fuze Mk 52 is identical to the Fuze Mk 44 Mod 1 in construction and operation, except that it has weaker detent springs. Lower arming speed makes it suitable for use in large-caliber projectiles.



Figure 57.—Auxiliary Detonating Fuze Mk 52 Exterior View Full Size

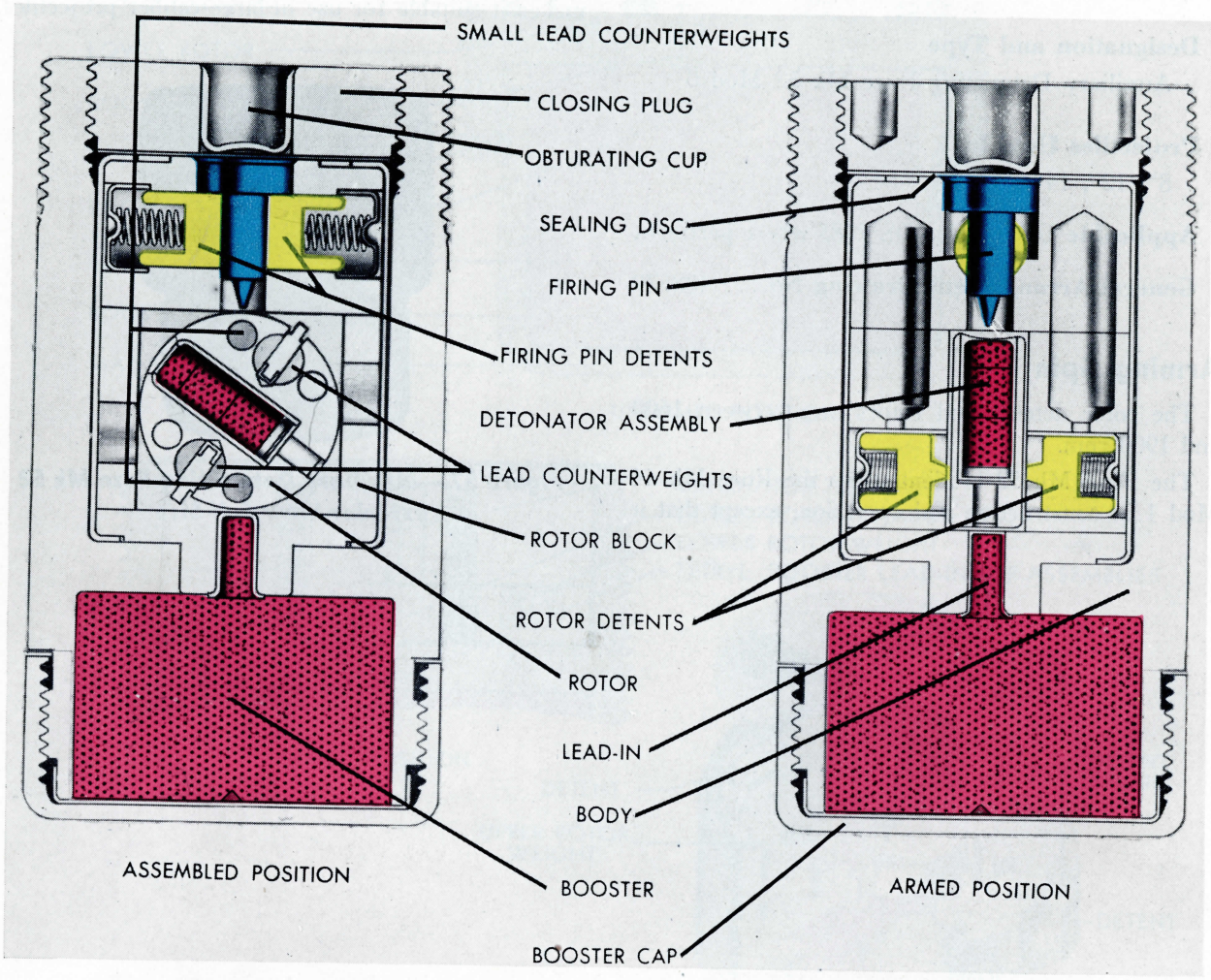

Figure 58.—Auxiliary Detonating Fuze Mk 54—Sectional View

Chapter 29

AUXILIARY DETONATING FUZE MARK 54

General Data

NOTE: The fuzes Mk 54 and Mk 55 differ only in the strength of the detent springs. Those of the Fuze Mk 55 are weakened to make the latter fuze suitable for use in major-caliber low-spin projectiles.

Designation and Type

Auxiliary Detonating Fuze Mk 54 Mod —

Projectiles Used In

AA	AA Common	HC
*3″/23 val.	5″/25 cal.	*4″/50 cal.
*3″/50 cal.	5″/38 cal.	5″/51 cal.
		6″/53 cal.
		6″/47 cal.

* Use Mk 54 Mod 0 only (with steel body)

Overall Dimensions and Weight

Length ..... 2.50 in.
Body thread ..... 1⅜-in.—20NS-2LH
Weight Mod 0 ..... 0.76 lb.
Mod 1 ..... 0.491 lb.

Material

Body Mod 0 ..... Steel
Body Mod 1 ..... Aluminum
Closing plug ..... Steel or brass
Booster cap ..... Steel
Rotor block ..... Aluminum alloy
Rotor ..... Aluminum alloy
Firing pin holder ..... Brass
Base for rotor ..... Brass

Applicable OS..... 3421

General Arrangement Drawing No.... 438127

Explosives Used

Detonator—Lead azide primer cap mixture, lead azide, tetryl
Lead-out of rotor—Tetryl
Lead-in—Tetryl
Booster—Tetryl

Description

The fuze is composed of a one-piece body with a booster cap and a plug closing the respective ends. The fuze body assembly houses the sealing cup assembly, which includes the firing pin assembly, the rotor block assembly, and the base for the rotor. The fuze is designed:

(1) To detonate the projectile explosive charge and thereby burst the projectile with high-order detonation instantaneously after the initiating explosive charge in the nose fuze is fired.

(2) To insure safety in transportation and stowage and to prevent detonation of the projectile in the gun should the initiating nose fuze function prematurely.

(3) Not to function or detonate when assembled in a projectile and then dropped nose-, side-, or base-down from a height of 40 feet onto armor plate.

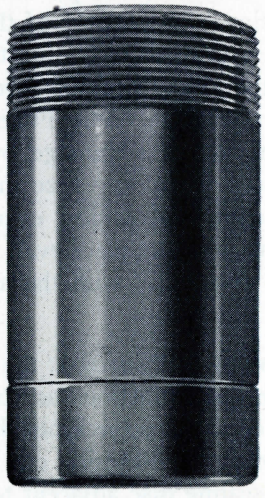

Figure 59.—Auxiliary Detonating Fuze Mk 54 Exterior View Full Size

Operation

The fuze is assembled in the unarmed position and remains in this condition during transportation and stowage and until the projectile in which it is assembled is fired from a gun. When the projectile is fired from a gun, centrifugal force moves the firing pin detents and rotor detents outward, overcoming the holding forces and thereby releasing the firing pin and rotor.

The rotor, which contains four lead counterweights and the detonator, is provided with two stop pins and is assembled in the rotor block with the axis of the detonator at an angle of 55 degrees from the long axis of the fuze. The line of the stop pins, being perpendicular to the axis of the detonator, is at an angle of about 35 degrees from the long axis of the fuze. The rotor is held in this (unarmed) position by the two rotor detents, the tapered ends of which engage in holes in the sides of the rotor. In this position the detonator element is safe, and if the detonator were to be exploded it would not detonate the booster. The rotor detents, on being moved outward by centrifugal force, withdraw from the holes in the rotor, permitting the counterweights to rotate the rotor until the detonator is in line with the booster lead-in and firing pin, respectively. In this position the rotor is not in dynamic equilibrium but, due to the positions of the two small lead counterweights and the two empty holes, is tending to rotate further. Further rotation of the rotor is prevented by the stop pins which press against the edges of the two holes, one placed in each side of the rotor housing. The purpose of this arrangement is to maintain a positive torque on the rotor, acting to hold it in the armed position throughout all motion of the projectile in flight. Fuzes of the Mk 54 type have the further advantage over the Mk 17 type of auxiliary detonating fuze in that they have an increased amount of arming energy, thus insuring that arming will take place even though the fuze is not exactly concentric with the axis of the projectile.

The rotor is now fully armed; the firing pin is released and the fuze functions as follows: The gas pressure and/or shock wave from the action of the nose fuze forces the obturating cup down, shearing the firing-pin sealing disc adjacent to the firing pin. The sharp-pointed firing pin is in turn thrust into the lead azide primer cap mixture of the detonator, initiating it and, in turn, the booster lead-in and the booster.

Arming Spin

Both the firing pin detents and the rotor detents arm between 3000 and 4500 rpm in static spin tests.

Safety Features

The rotor assembly and the firing pin are held in the unarmed position by their respective safety detents. The fuze is armed only by centrifugal force. One set of detents holds the firing pin and one set holds the rotor unit in the unarmed position. In addition, centrifugal force is necessary to cause the counterweights to carry the rotor to its armed position when the added friction due to setback has ceased. If the detonator should fire in the unarmed position, it would not detonate the booster charge.

Acceptance Tests

Sample fuzes chosen at random from the preliminary lot and from each production lot are subjected to routine safety tests and the following ballistic tests:

Bore Safety Test—Two completely live-loaded fuzes from the first lot, fortieth lot, and every fortieth lot thereafter are installed with "prearmed" point detonating fuzes in 5-in. projectiles. These projectiles are fired at near proof velocity against a wooden screen placed not more than two feet from the muzzle of the gun. If either one of the fuzes detonates on impact, the lot is rejected. In the event a lot is rejected, every subsequent lot is subjected to this test until twenty consecutive lots have passed.

Static Safety Test—Two completely live-loaded fuzes from the first lot, fortieth lot, and every fortieth lot thereafter are assembled with a suitable mechanical time fuze. With the rotor of the auxiliary detonating fuze in the unarmed position, the time fuze is fired for a safety test of the auxiliary fuze. If one or both of the auxiliary fuzes detonate, the lot is rejected. In the event a lot is rejected, every subsequent lot is subjected to this test until twenty consecutive lots have passed.

Functioning Tests—Ten completely live-loaded fuzes from each lot (with the exception of the fifteenth lot and each fifth lot thereafter) are installed in 5-in. projectiles assembled with mechanical time

fuzes of good quality. The auxiliary detonating fuze is assembled on the center of the axis of rotation of the projectile. Two of the projectiles are fired at proof or near proof pressure, and the remainder are fired at service pressure. Satisfactory performance for this test is 100% high-order functioning.

Ten completely live-loaded fuzes from each of the first ten lots and from every fifth lot thereafter (i.e., 15, 20, 25, etc.) are assembled with mechanical time fuzes, point detonating fuzes, or powder train fuzes of good quality. The auxiliary detonating fuze is located by means of an adapter 0.04-in. off the axis of rotation of the projectile. Two of the projectiles are fired at proof or near proof pressure and the rest at service pressure. Satisfactory performance for this test is 80% high-order functioning. In the event that the eccentric adapters are not available for this test, the ten fuzes are fired on center as specified in the paragraph above.

Markings on the Fuze

The closing plug is stamped with the following data:

AUX.
DET. FUZE
MK 54 MOD —

Manufacturer's Symbol; Lot —; Symbol of Loading Plant; Month and Year of Loading; Anchor Sign; Inspector's Initials.

Remarks

The Fuzes Mk 54 and Mk 55 were developed to replace the Auxiliary Detonating Fuzes Mk 46 and Mk 35 because of serious deterioration of the fulminate primer caps in the latter, which resulted in excessive duds. By developing the new non-fulminate sealed detonator of the stab type, a much longer life fuze is expected to result.

The Fuzes Mod 0 and Mod 1 differ only in the material of the body; steel for the Mod 0 and aluminum for the Mod 1. It should be noted that the Fuze Mk 54 Mod 0 only is authorized for use in 3″/23, 3″/50 and 4″/50 caliber projectiles. Because the Mod 1 weighs 0.27 lb. less than the Mod 0, it is very difficult to bring the loaded and fuzed weight of these projectiles up to the desired point where the Mod 1 is used.

The manufacture of Fuzes Mk 54 Mod 1 with aluminum bodies has been discontinued. Experience with Fuzes Mk 54 Type has shown that these fuzes are more tolerant of eccentric spin than Fuzes Mk 46 Type, as shown by static spin tests and by firing in eccentric adapters.

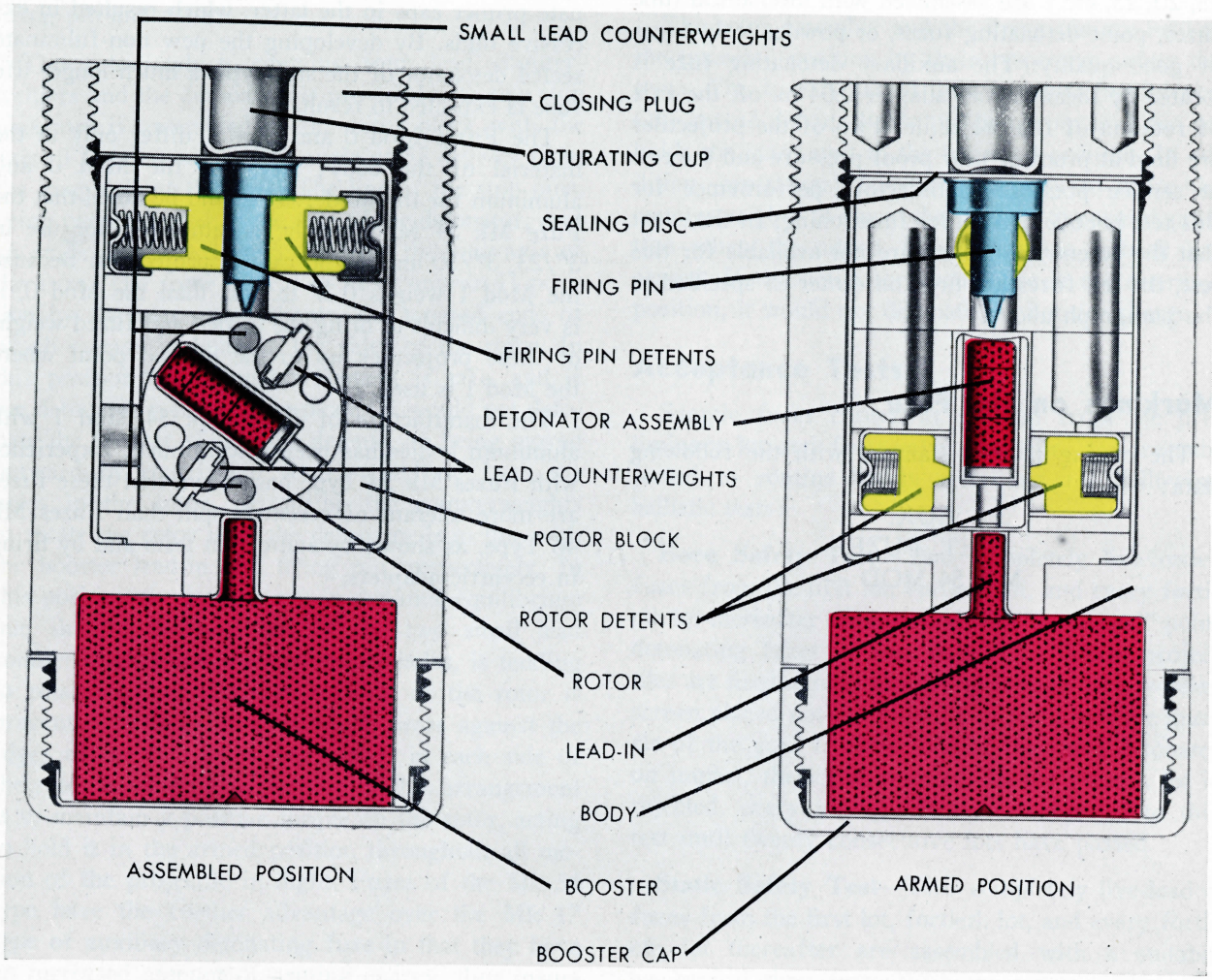

Figure 60.—Auxiliary Detonating Fuze Mk 55—Sectional View

Chapter 30

AUXILIARY DETONATING FUZE MARK 55

General Data

NOTE: The Fuzes Mk 54 and Mk 55 differ only in the strength of the detent springs. Those of the Fuzes Mk 55 are weakened to make this fuze suitable for major-caliber low-spin projectiles.

Designation and Type

Auxiliary Detonating Fuze Mk 55 Mod —

Projectiles Used In

HC
8″, 12″, 14″, 16″

Overall Dimensions and Weight

Length	2.50 in.
Body thread	1⅜-in.—20NS-2LH
Weight Mod 0	0.76 lb.
Mod 1	0.491 lb.

Material

Body Mod 0	Steel
Body Mod 1	Aluminum
Closing plug	Steel
Booster cap	Steel
Rotor block	Aluminum alloy
Rotor	Aluminum alloy
Firing-pin holder	Brass
Base for rotor	Brass

Applicable OS 3421

General Arrangement Drawing No. 438127

Explosives Used

Detonator—Lead azide, primer cap mixture, lead azide, tetryl
Rotor lead-out—Tetryl
Lead-in—Tetryl
Booster—Tetryl

Description

The fuze is composed of a one-piece body with a booster cap and plug closing the respective ends. The fuze body assembly houses the sealing cup assembly, which includes the firing pin assembly, the rotor block assembly, and the base for the motor. The fuze is designed:

(1) To detonate the projectile explosive charge and thereby burst the projectile with high-order detonation instantaneously after the initiating explosive charge in the nose fuze is fired.

(2) To insure safety in transportation and stowage and to prevent detonation of the projectile in the gun should the initiating nose fuze function prematurely.

(3) Not to function or detonate when assembled in a projectile and then dropped nose-, side-, or base-down from a height of 40 feet onto armor plate.

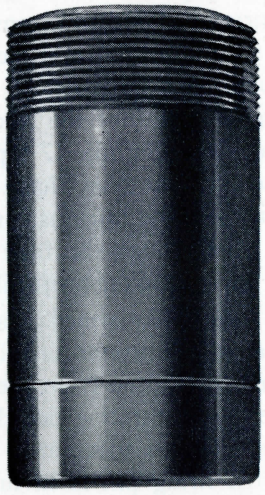

Figure 61.—Auxiliary Detonating Fuze Mk 55 Exterior View Full Size

Operation

The fuze is assembled in the unarmed position and remains in this condition during transportation and stowage and until the projectile in which it is assembled is fired from a gun. When the projectile is fired from a gun, centrifugal force moves the firing pin detents and rotor detents outward, overcoming the holding forces and thereby releasing the firing pin and rotor.

The rotor, which contains four lead counterweights and the detonator, is provided with two stop pins and is assembled in the rotor block with the axis of the detonator at an angle of 55 degrees from the long axis of the fuze. The line of the stop pins, being perpendicular to the axis of the detonator, is at an angle of about 35 degrees from the long axis of the fuze. The rotor is held in this (unarmed) position by the two rotor detents, the tapered ends of which engage in holes in the sides of the rotor. In this position the detonator element is safe, and if the detonator were to be exploded it would not detonate the booster. The rotor detents, on being moved outward by centrifugal force, withdraw from the holes in the rotor, permitting the counterweights to rotate the rotor until the detonator is in line with the booster lead-in and firing pin, respectively. In this position the rotor is not in dynamic equilibrium but, due to the positions of the two small lead counterweights and the two empty holes, is tending to rotate further. Further rotation of the rotor is prevented by the stop pins which press against the edges of the two holes, one placed in each side of the rotor housing. The purpose of this arrangement is to maintain a positive torque on the rotor, acting to hold it in the armed position throughout all motion of the projectile in flight. Fuzes of the Mk 55 type have further advantage over the Mk 17 type of auxiliary detonating fuze in that they have an increased amount of arming energy, thus insuring that arming will take place even though the fuze is not exactly concentric with the axis of the projectile.

The rotor is now fully armed; the firing pin is released and the fuze functions as follows: The gas pressure and/or shock wave from the action of the nose fuze forces the obturating cup down, shearing the firing-pin sealing disc adjacent to the firing pin. The sharp-pointed firing pin is in turn thrust into the lead azide primer cap mixture of the detonator, imitating it and, in turn, the booster lead-in and the booster.

Arming Spin

The detents arm between 1600 and 1900 rpm in static spin tests.

Safety Features

The rotor assembly and the firing pin are held in the unarmed position by their respective safety detents. The fuze is armed only by centrifugal force. One set of detents holds the firing pin and one set holds the rotor unit in the unarmed position. In addition, centrifugal force is necessary to cause the counterweights to carry the rotor to its armed position when the added friction due to setback has ceased. If the detonator should fire in the unarmed position, it would not detonate the booster charge.

Acceptance Tests

Sample fuzes chosen at random from the preliminary lot and from each production lot are subjected to routine safety tests and the following ballistic tests:

Bore Safety Test—Two completely live-loaded fuzes from the first lot, fortieth lot, and every fortieth lot thereafter are installed with "prearmed" point detonating fuzes in 5-in. projectiles. These projectiles are fired at near proof velocity against a wooden screen placed not more than two feet from the muzzle of the gun. If either one of the fuzes detonates on impact, the lot is rejected. In the event a lot is rejected, every subsequent lot shall be subjected to this test until twenty consecutive lots have passed.

Static Safety Test—Two completely live-loaded fuzes from the first lot, fortieth lot, and every fortieth lot thereafter are assembled with a suitable mechanical time fuze. With the rotor of the auxiliary detonating fuze in the unarmed position, the time fuze is fired for a safety test of the auxiliary fuze. If one or both of the auxiliary fuzes detonate, the lot is rejected. In the event a lot is rejected, every subsequent lot is subjected to this test, until twenty consecutive lots have passed.

Functioning Tests—Five completely live-loaded fuzes from each lot are installed in 8″, 12″, 14″, or 16″ projectiles with mechanical time fuzes, point detonating fuzes, or powder train fuzes of good quality. The auxiliary detonating fuzes are assembled on the center of the axis of rotation of the projectile. Satisfactory performance of this test shall be 100% high-order functioning.

Ten completely live-loaded fuzes from each of the first ten lots and from every fifth lot thereafter (i.e., 15, 20, 25, etc.) are assembled with mechanical time fuzes, point detonating fuzes, or powder train fuzes of good quality. The auxiliary detonating fuze is located by means of an adapter 0.04-in. off the axis of rotation of the projectile. Two of the projectiles are fired at proof or near proof pressure and the rest at service pressure. Satisfactory performance of this test is 80% high-order functioning. In the event that the eccentric adapters are not available for this test, the ten fuzes are fired on center as specified in the paragraph above.

Markings on the Fuze

The closing plug is stamped with the following data:

AUX.
DET. FUZE
MK 55 MOD —

Manufacturer's Symbol; Lot —; Symbol of Loading Plant; Month and Year of Loading; Anchor Sign; Inspector's Initials.

Remarks

The Fuzes Mk 54 and Mk 55 were developed to replace the Auxiliary Detonating Fuzes Mk 46 and Mk 35, respectively, because of serious deterioration of the fulminate primer caps in the latter, which resulted in excessive duds. By developing the new non-fulminate sealed detonator of the stab type, a much longer life fuze is expected to be the result.

The Fuzes Mod 0 and Mod 1 differ only in the material of the body; steel for the Mod 0 and aluminum for the Mod 1. The manufacture of Fuzes Mk 55 Mod 1 with aluminum bodies has been discontinued. Experience with Fuzes Mk 55 has indicated that these fuzes have a greater tolerance for eccentric spin than Fuzes Mk 35.

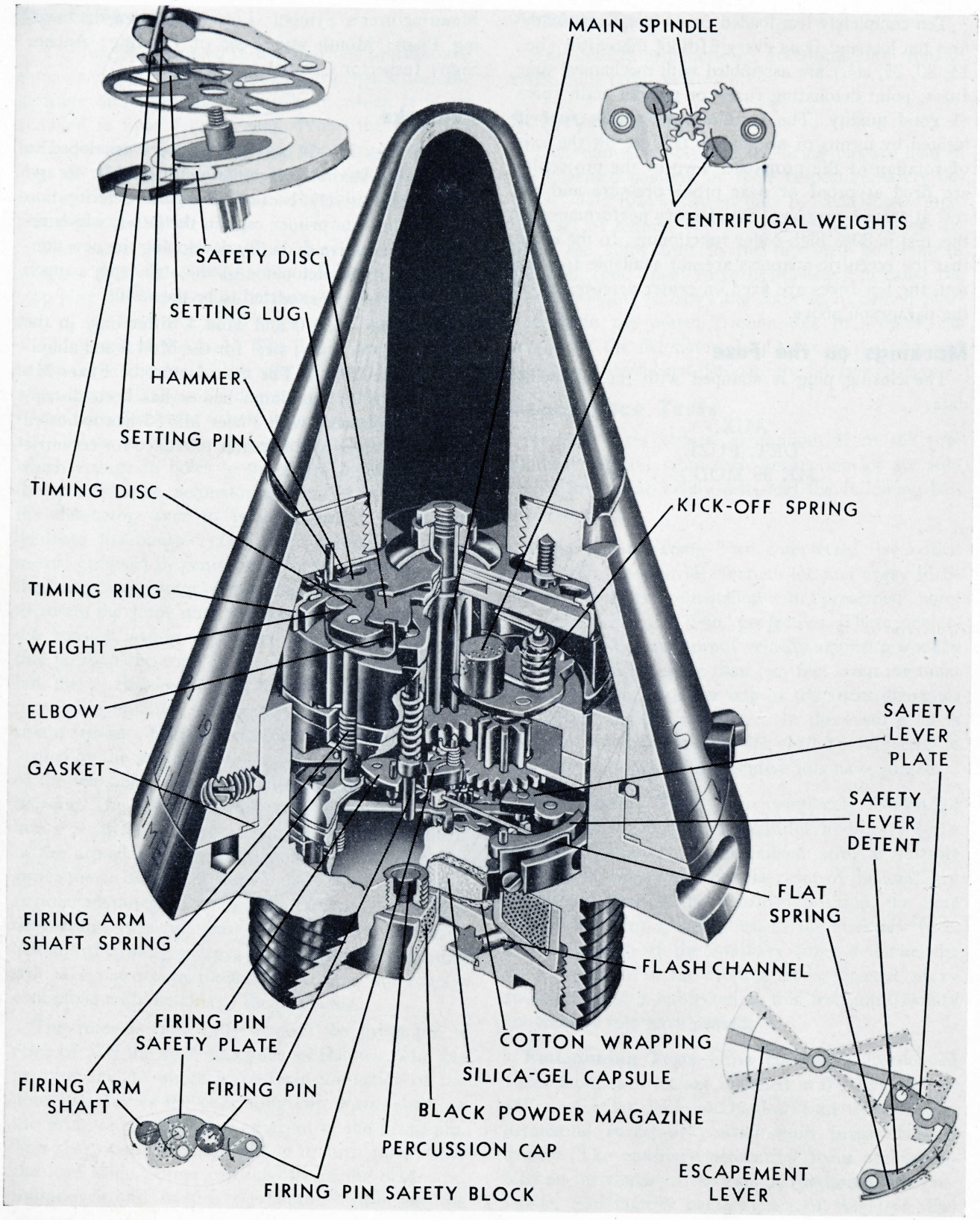

Figure 62.—Mechanical Time Fuze Mk 61 Mod 0—Cutaway

Chapter 31

MECHANICAL TIME FUZE MARK 61 MOD 0

General Data

Designation and Type

Mechanical Time Fuze Mk 61 Mod 0

Projectiles Used In

5"/38 AA Common and WP Projectiles at reduced velocity of 1200 f/s

Overall Dimensions and Weight

Length ..... 4.313 in.
Body threads ..... 1.70-in.—14NS-1RH
Weight ..... 2.28 ± 0.06 lb.

Material

Body ..... Brass
Lower cap ..... Brass
Upper cap ..... Zinc

Applicable OS ..... Use 2114 when pertinent

General Arrangement Drawing No. ... 440479

Explosives Used

Primer cap contains either F.A. 70 Primer mixture consisting of potassium chlorate, antimony sulphide, TNT and lead sulfocyanate, or the F.A. 70 primer mixture modified to contain 8% ground glass; magazine charge consists of not less than 40 grains of black powder in a moisture proof plastic container. This is the same as for the Fuze Mk 50.

Description

The 45-second Mechanical Time Fuze, Mk 61 Type is designed to initiate detonation of high-explosive projectiles or to initiate functioning of a WP projectile at a predetermined lapse of time and in guns using a reduced velocity of 1200 f/s initial velocity. When employed for high-explosive initiation, these time fuzes are used in conjunction with auxiliary detonating fuzes which are actuated by the pressure (not flame) produced by the burning of the black-powder base charge of the mechanical time fuze.

In its assembled form, the fuze consists of four main sub-assemblies: the movement assembly, the body, the lower cap, and the upper cap. The movement assembly is attached to the inside of the body

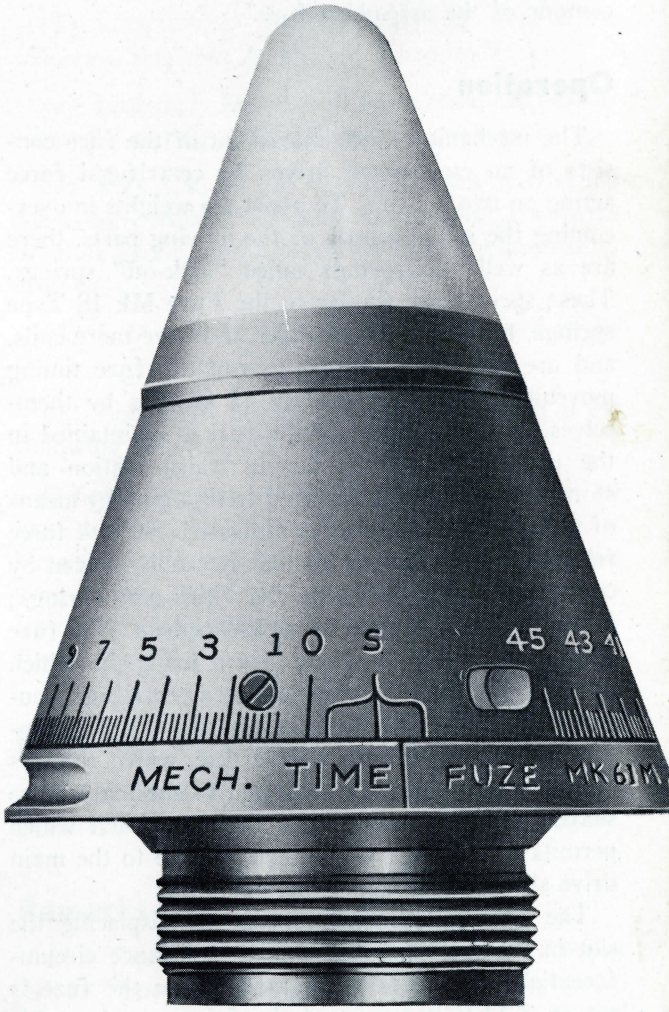

Figure 63.—Mechanical Time Fuze Mk 61 Mod 0 Exterior View Full Size

by three holding screws and contains the firing pin and the mechanism which eventually releases it. The brass body contains a magazine charge (not less than forty grains of black powder in a plastic container which is practically impervious to moisture), the primer cap, and a black-powder relay pellet (to augment flame from primer) in the bottom closing screw. The lower cap is inscribed with a scale graduated in seconds for setting the fuze and is attached to the body by a joint connected by a tensioning feature wherein the tensional resistance to rotative relative movement between the lower cap and body is effected by four screws during assembly, at the fuse manufacturing plant. The lower cap and body are each provided with a lug for engagement in a slot of a fuze-setter or hand-setting wrench. The upper cap screws into the lower cap and completes the nose contour of the assembled fuze.

Operation

The mechanical clock movement of the fuze consists of an escapement driven by centrifugal force acting on two weights. To assist the weights in overcoming the initial inertia of the moving parts, there are as well two springs called "kick-off" springs. These springs are similar to the Fuze Mk 18 Type springs, but are much stronger and have more coils, and are sufficiently strong to run the fuze timing movement for approximately 45 seconds by themselves. The mechanism of the fuze is maintained in the unarmed condition during transportation and storage and until actually fired from a gun, by means of the safety features to be discussed. Setback force releases the mechanism so that it can be driven by centrifugal force aided by the "kick-off" springs; its rate being governed by an escapement. The fuze primer is fired by a spring-driven firing pin which is released at the correct instant by a centrifugal control mechanism (the firing arm assembly). The timing element, termed the timing disc, which receives the selective setting, is connected to the main drive shaft, or center arbor, by a friction clutch which permits the timing disc to turn relative to the main drive shaft during the setting operation.

The setting operation consists of displacing the slot in the timing disc the proper distance circumferentially from the firing arm. When the fuze is set on SAFE, entrance of the firing arm into this slot is prevented by the location of the safety disc over the slot opening. At all operational settings of the fuze, however, the timing disc slot has been swung around clear of the safety disc. In order to turn the timing disc relative to the firing arm, and to the main drive shaft, a setting pin is provided. This setting pin is fixed at one end to the top inside shoulder of the lower (rotative) cap in such a position as to be parallel to the longitudinal axis of the fuze. The free end of the setting pin engages the forked lug of the timing disc. Upon firing from a gun, disengagement of the setting pin from the forked lug is effected under force of setback by two small weights of the hammer spring assembly, which depress the forked lug. Since the setback force is relatively low in projectiles utilizing reduced charges, the flat hammer spring has been weakened, in comparison with the Fuze Mk 18 Type hammer spring. As soon as the force of setback decreases from its maximum value, the spring holder of the weights begins to return them to a forward position clear of the timing disc. The forked lug remains bent down; thus, the timing disc is unlocked by the force of setback.

While the timing disc is being unlocked, the entire gear train, including the escapement mechanism and the main drive shaft, is unlocked almost simultaneously by two centrifugally controlled mechanisms. The first is a safety-lever plate assembly which itself is held by a centrifugally operated detent. (The latter in turn is secured by a flat spring when the fuze is at rest.) The safety-lever plate detent swings out to free the safety lever plate, which then also swings clear of the escapement lever, permitting the lever to begin its oscillations. Meanwhile, the second unlocking operation occurs at the other end of the gear train. Centrifugal force, augmented by backlash of the "kick-off" springs, acts to start and sustain the movement of the timing disc in its measurement of the time interval for which the fuze has been set. The speed of the timing disc and, therefore, the accuracy with which the predetermined interval of time will be measured, depends upon the accuracy of the escapement mechanism which governs the speed of the fuze movement. The escapement mechanism is carefully adjusted and regulated prior to installation of the movement assembly in the fuze body.

The fuze functions at the end of the predetermined interval of time for which the fuze has been set. The firing train is set off when the timing disc has rotated to a point where the firing arm may enter the timing-disc slot. Centrifugal force acting

on the operating weight of the firing arm moves the weight outward (with assistance of the spring on the firing-arm shaft), turning the lug into the timing disc slot by rotation of the firing arm shaft. A slot in the firing arm shaft is swung around as the shaft turns, clearing a weighted pawl. The latter pawl or safety plate differs from that for Fuze Mk 18 Type in having a weight assembled thereto. This pawl, the firing pin safety assembly, moves outward from its normal position under the shoulder of the firing pin, partly due to centrifugal force and partly due to a camming action by the firing pin, allowing the latter to be driven downward by the firing pin spring. Another safety feature, the firing pin safety block, which is also in position under the shoulder of the firing pin when the fuze is at rest, will have already been swung out of the way (against its retaining spring) by centrifugal force, upon the firing of the projectile.

The firing pin, driven downward by its spring, strikes the fuze primer. Flash from the primer and a hollow black-powder relay pellet which is included in the primer assembly, initiates the magazine charge, which consists of forty or more grains of black powder in a Bakelite container, located in the base of the fuze body. A small, hollow black-powder relay pellet is included in the primer screw assembly located in the fuze body, for purposes of augmenting the flame which ignites the black-powder magazine charge. The Fuze Mk 61 is a moisture-proof design incorporating the same sealing features as the Fuze Mk 50 Type.

Safety Features

(a) A spring-loaded safety lever prevents oscillation of the clockwork escapement until it rotates out of engagement by centrifugal force. In addition, safety is provided in the Fuze Mk 61 type by a centrifugally operated detent or plate, holding the safety lever plate which locks the escapement. The detent or plate is held by a flat spring.

(b) When the fuze is set on SAFE or anything less than the prescribed minimum setting, the firing slot in the timing disc is covered by a safety disc, so that if the timing disc were rotated into firing position it could not release the firing arm and trip the firing pin.

(c) The timing disc is prevented from rotating by the setting pin, which passes between two prongs of a raised forked lug near the edge of the timing disc itself. This lug is bent out of the way of the setting pin by the hammer in the upper cap when setback occurs.

(d) For additional safety a centrifugal safety block was added under the shoulder of the firing pin. A weight was also added to the firing-pin safety plate to make more certain its moving from under the firing pin shoulder to release the firing pin.

Acceptance Functioning Tests

Sample fuzes from the following product in lots are assembled in 5″/38 cal. projectile and fired in guns using charges giving an initial velocity of 1200 f/s. The following procedure is carried out.

(1) Lots 1, 6, 11, etc.: 10 fuzes each fired at the following settings: 3, 10, and 30 seconds.

(2) Lots 2, 7, 12, etc.: 10 fuzes each fired at the following settings: 20, 35, and 45 seconds.

(3) Lots 3, 8, 13, etc.: 10 fuzes each fired at the following settings: 15 and 40 seconds; six fuzes fired on SAFE; from fuzes for hard-surface safety drop test.

(4) Lots 4, 9, 14, etc.: 10 fuzes each fired at the following settings: 3, 20, and 30 seconds.

(5) Lots 5, 10, 15, etc.: 10 fuzes each fired at the following settings: 10, 25, and 40 seconds.

Definite acceptance test limits for Fuze Mk 61 have not been set, as a sufficient number of samples have not been tested ballistically. At the present time, acceptance is based on a reasonably satisfactory performance when compared to current production of Fuzes Mk 50.

Markings of Fuze

Mech. Time Fuze, Mk 61 Mod 0; Initials of Manufacturer and of Navy Inspector; Lot No. —.

Remarks

(1) The Fuze Mk 61 is very similar to the Fuzes Mk 18 Type in appearance and clockwork movement. The clockwork movement of the fuze utilizes two weighted arc gears acted on by centrifugal force for the primary driving force. However, these gears or

weights have been made heavier by modification of the plate and spacer thickness of the weighted portion. Increasing the driving weights also necessitated a modification of the fuze body to provide clearance. Another modification over the Mk 18 design was strengthening of the "kick-off" springs and increasing the number of coils. Because of decrease in the setback force resulting from use of 1200 f/s charges, the hammer spring was weakened.

(2) The Fuze Mk 61 also incorporates many features of the Fuze Mk 42 design. The setback safety pin was eliminated as in the Mk 42 type, and a spring was added to cause rotation of the firing arm. A weight was added to the safety pawl to make more certain its moving from under the firing-pin shoulder to release the firing pin. In addition, a centrifugal safety block was added under the shoulder of the firing pin. The safety-lever plate which locks the escapement was modified by adding a centrifugally operated detent or plate and having it retain or bear against the former (safety-lever plate). The added detent or plate is held by a flat spring.

(3) These fuzes are being manufactured in lots of 2000 units plus test samples, and are being made at Thomas A. Edison, Inc.

(4) **Time Setting Characteristics:** The Fuze Mk 61 Mod 0 functions as follows for various settings:

Setting	Action
Safety zone including 0.0 second	Dud caused by built-in feature (safety disc)
*0.3 to 0.3 second	May be a dud or may function somewhere between 0.8 and 1.0 second
0.3 to 0.8 second	Will function somewhere between 0.8 and 1.0 second
0.8 to 45.0 seconds	Will function at time set (within allowable calibration error)

***NOTE:** These settings are not recommended because the resultant actions are variable on account of manufacturing tolerances.

Chapter 32

MECHANICAL TIME FUZE MARK 62 MOD 0

General Data

Designation and Type

Mechanical Time Fuze Mk 62 Mod 0

Projectiles Used In

12″, 14″, and 16″ HC (replaces Fuze Mk 42)

Overall Dimensions and Weight

Length ..... 4.313 in.
Body threads ..... 1.70-in.—14NS-1RH
Weight ..... 2.28 ± 0.06 lb.

Material

Body ..... Brass
Lower cap ..... Brass
Upper cap ..... Zinc

Applicable OS ..... Use 2114 when pertinent

General Arrangement Drawing No. 561996

Description and Operation

The description and operation of the Fuze Mk 61 in this OP is equally applicable to the Fuze Mk 62. On account of improper functioning of the hammer on setback, in the Fuze Mk 42 Type, the Fuze Mk 62 was produced to replace the Mk 42 in major-caliber HC projectiles. This fuze uses the same explosives as in the Fuze Mk 50 Type. Safety features as outlined for the Fuze Mk 61 apply to this fuze.

Remarks

The Fuze Mk 62 Type differs from the Mk 61 in the following ways:

(1) To prevent arming on accidental dropping of the fuze, a safety post has been placed under the hammer spring in the Fuze Mk 62.

(2) The "kick-off" springs on the centrifugal weight differ from the Mk 61 design in being weaker. This design provides torque over a longer period of time, and is necessitated by the lower spin rate of major-caliber projectiles.

(3) The escapement lever has been modified by the addition of small weights to enable a more efficient slowing down of the gear system.

(4) In addition to having the weakened hammer spring of the Fuze Mk 61 design, the lugs in the timing disc have been weakened. This enables weaker force of setback to act upon the hammer spring and forked lug assembly of the fuze.

Acceptance Test

Sample fuzes are assembled in major-caliber projectiles and undergo the following tests. Because of the scarcity of major-caliber projectiles, however, the NPG is authorized to conduct functioning tests in 5″/51 caliber guns at 1100 f/s velocity whenever necessary. All major-caliber projectiles may be partially loaded, provided service weight and balance are maintained. The following tests are carried out:

Two fuzes from each lot are assembled into major-caliber projectiles and fired set on "safe." The fuze must not function during the flight of the projectile. When practicable, this test shall be conducted in worn guns using excess propellent charges.

Twenty fuzes from each lot are to be assembled into major-caliber projectiles and fired for time functioning. At least ten fuzes from each group of ten lots produced shall be fired in a 16-in. gun using HC charges. The NPG is authorized to select the time settings used for each test. It is anticipated that the Fuze Mk 62 will function within the firing limits specified in OS 2114. Only one dud will be allowed in the time functioning tests of a lot. "Wild rounds" and "prematures" as defined in OS 2114 will not be acceptable.

Markings on the Fuze

Mech. Time Fuze Mk 62 Mod 0; Initials of Manufacturer and of Navy Inspectors; Lot No. —.

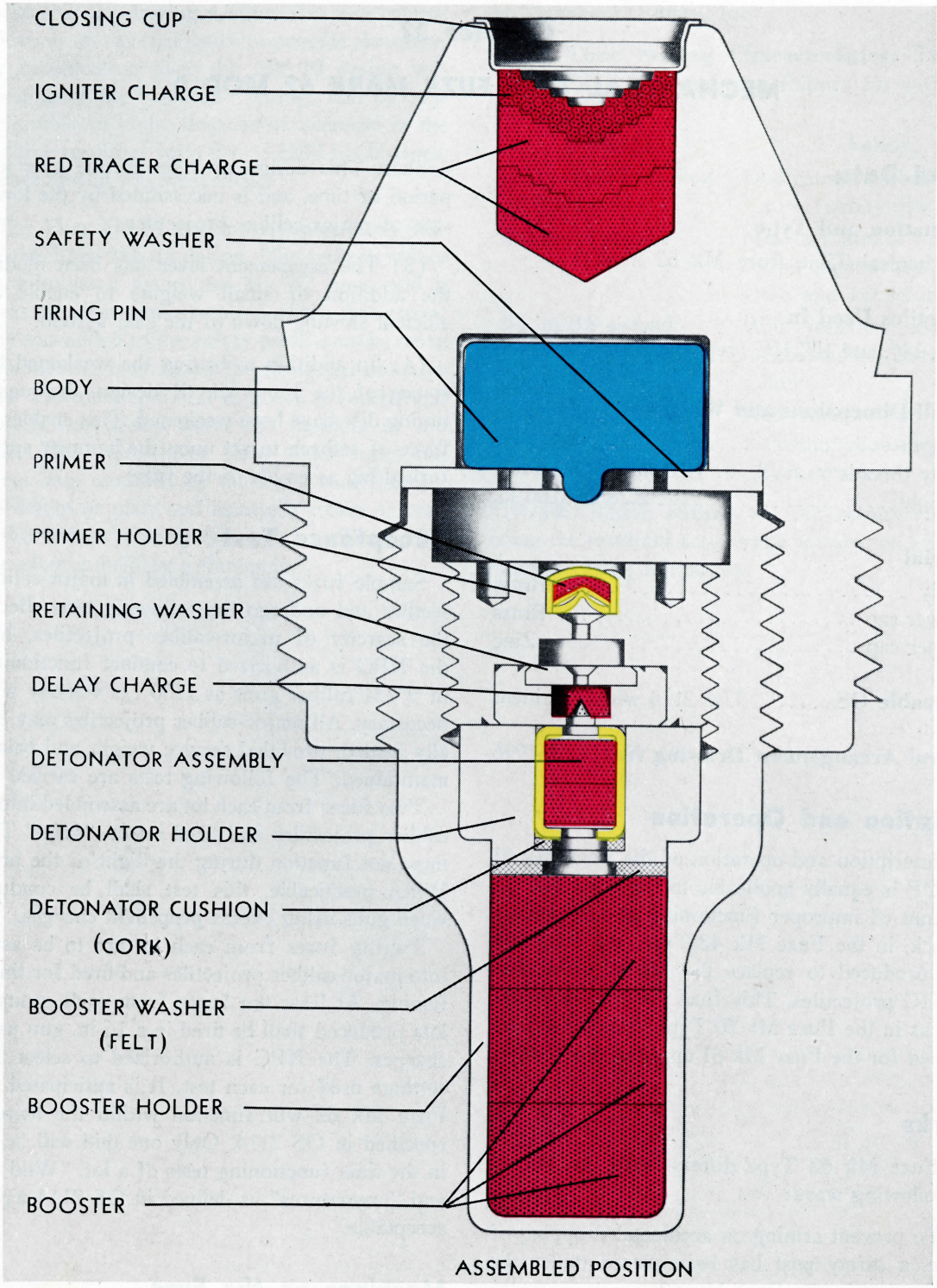

Figure 64.—Base Detonating Fuze M66A1—Sectional View

Chapter 33

BASE DETONATING FUZE M66A1

General Data

Designation and Type

Base Detonating Fuze M66A1

Projectile Used In

3″ AP Mk 29

Overall Dimensions and Weight

Length	3.458 in.
Thread length	0.70 in.
Body threads	1.65-in—10NS-1LH
Weight	1.0 lb.

Material

Detonator holder	Steel
Body	Chrome molybdenum steel
Firing pin	Brass
Safety washer	Steel
Booster holder	Chrome molybdenum steel
Primer holder	Brass
Delay charge holder	Brass

General Arrangement Drawing No.

73-2-178 (Army Ordnance)

Explosives Used

Primer (No. 26)—F.A. 70 mixture
Delay element—Black powder
Detonator (M17)—Lead azide and tetryl
Booster—Tetryl (five grams)

Description

The Fuze M66A1 contains no moving parts until impact occurs. That is, it is always armed in the technical sense. It consists essentially of a firing pin permanently in line with the primer and restrained from moving forward against the primer only by a steel safety washer which must be ruptured on impact to actuate the fuze. It contains a delay element of 0.016-second duration. The base of the fuze body contains an integral tracer which burns with a red flame.

Operation

No changes take place in the fuze on firing or during flight, since the only movable part is the brass firing pin and it is restrained by a steel safety washer. On relatively heavy impact, the retardation of the projectile causes the heavy firing pin to rupture the steel safety washer by its inertia and to continue forward until it impinges upon the primer. This in turn ignites the delay element which, after about 0.016 second, initiates the detonator, the fuze booster, and finally the projectile filler.

Arming Spin

None required. There are no centrifugal arming features.

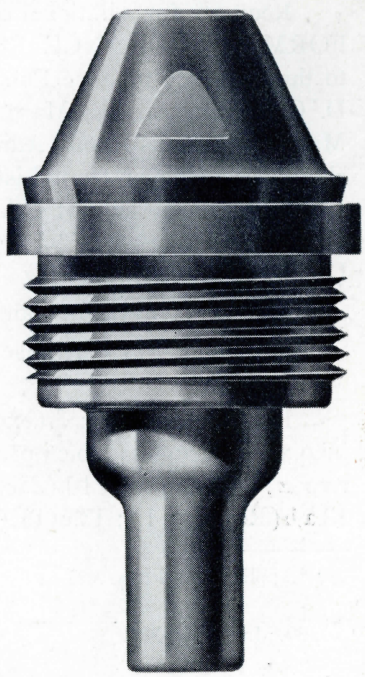

Figure 65.—Base Detonating Fuze M66A1 Exterior View Full Size

Safety Features

The only safety feature in the Fuze M66A1 is the steel safety washer which restrains the movable firing pin. This washer is of such strength that an assembled 3-in. AP round can be dropped in any attitude onto armor plate from a height of 40 feet without actuating or deranging the fuze.

Sensitivity Limits

The Fuze M66A1 in the 3-in. AP Projectile Mk 29 Mod 2 will function reliably on ½-in. STS plate at 20° obliquity and about 1400 f/s striking velocity. It will not function reliably on ⅜-in. mild steel plate. It will not function reliably on water or soft ground impacts.

Ballistic Acceptance Tests

Samples from each production lot are subjected to routine safety tests and to the following ballistic tests: Ten rounds from each lot are fired against 3-in. Class A or B plate at various velocities. Acceptance is based on 70% performance.

Markings on the Fuze

Around the flange of the body the following data are stamped: Lot No. —; Month and Year of Loading; FUZE, B.D., M66A1.

Remarks

The Fuze M66A1 is an Army fuze used primarily in anti-tank ammunition. It has been temporarily adopted for naval use pending the completion of the design, manufacture, and availability of a safer, more sensitive Navy fuze.

DISTRIBUTION

Requests for additional copies of OP 1212 should be submitted on NAVORD FORM 1, ORDNANCE PUBLICATIONS AND FORMS REQUISITION, to the nearest Ordnance Publications Distribution Center: Navy Yard, Wash. 25, D. C.; Adak, Alaska; Mare Island, Calif.; Pearl Harbor, T. H.; Guam Island, Marianas; Manus Island, Admiralty Islands. Distribution Center Mailing addresses should be obtained from List 10 nn of the Standard Navy Distribution List, or from the reverse side of NAVORD FORM 1.

DISTRIBUTION:

Standard Navy Distribution List No. 28 (C) and (31) R

2 copies unless otherwise noted.

1.; 2.f,h,k,n,r,u,w; 3.(except s); 4.(except s); 5.b(London only); 6.a; 7.e,f, h,i,q,x; 7.(5 copies),a,b,c,j,p*,s; 8.b,h*,i,j,n(SPECIAL LIST K,L,S,V,Z,AA,BB), r,v,x,z; 10.s,qq,ss; 10.(25copies),nn*; 11.a(BuShips,CNO,ComdtMarCorps); 12.a,b(Revision 1); 13.c(1),(3),(4),(6); 14.a,q;

*Applicable addressees

☆ U. S. GOVERNMENT PRINTING OFFICE: 1945—655586

30 May 45/25M/1

RESTRICTED

NAVY DEPARTMENT

BUREAU OF ORDNANCE

WASHINGTON 25, D. C.

To all holders of Ordnance Pamphlet 1212
insert change; write on cover 'Change 1 inserted'
Approved by The Chief of The Bureau of Ordnance

Acting

OP 1212 CHANGE 1

10 July 1945

1 Page ———— Page 1

ORDNANCE PAMPHLET 1212 PROJECTILE FUZES
is changed as follows:

NOTE: Because of the urgent nature of this information on the Mechanical Time Fuzes Mk 61 and Mk 62, this Change is distributed in advance of OP 1212, Projectile Fuzes. It will be included in OP 1212 when OP 1212 is distributed.

Insert the following pages: Page 124a on the Mk 61 Mechanical Time Fuze and Page 125a on the Mk 62 Mechanical Time Fuze.

DISTRIBUTION

Requests for additional copies of OP 1212 Change 1 should be submitted on NAVORD FORM 1, ORDNANCE PUBLICATIONS AND FORMS REQUISITION, to the nearest Ordnance Publications Distribution Center: Navy Yard, Wash. 25, D.C.; Adak, Alaska; Mare Island, Calif.; Guam Island, Marianas; Pearl Harbor, T.H.; Manus Island, Admiralty Islands. Distribution Center mailing addresses should be obtained from List 10nn of the Standard Navy Distribution List, or from the reverse side of NAVORD FORM 1.

Standard Navy Distribution List No. 28 (C) and 31 (R)
2 copies unless otherwise noted.

1.
2. f, h, k, n, r, u, w
3. except s
4. except s
5. b(London only)
6. a
7. e, f, h, i, q, x
7. (5 copies), a, b, c, j, p
8. b, h*, i, j, n (SPECIAL LISTS K, L, S, V, Z, AA, BB), r, v, x, z
10. s, qq, ss
10. (25 copies), nn*
11. a(BuShips, CNO, ComdtMarCorps)
12. a, b (Revision 1)
13. c(1), (3), (4), (6)
14. a, q.

* Applicable Addressees.

Mechanical Time Fuze Mark 61

A new Mechanical Time Fuze, designated as the Mk 61, is now being manufactured for use in 5"/38 A.A.C. and W.P. projectiles fired at 1200 f.s. I.V. Mechanical time fuzes of the Mk 18 and Mk 50 types when fired in the 5"/38 caliber gun at 1200 f.s. I.V. were not reliable because they were not designed to meet these firing conditions. Setback produced by the 5"/38 caliber gun when fired at 1200 f.s. I.V. is not sufficient to insure reliable arming of the Fuzes Mk 18 and Mk 50. In addition to this condition, the spin rate produced at this reduced velocity is not sufficient to provide adequate driving force for the clockwork mechanism. These conditions necessitated the development of the Fuze Mk 61. The use of the Fuze Mk 61 and other fuzes with 5"/38 1200 f.s. cartridges is described in NAVORD OCL A8-45.

The basic design of the Fuze Mk 61 is the same as that of the Fuzes Mk 18 and Mk 50 except that the following modifications were made to overcome the shortcomings of the Fuzes Mk 18 and Mk 50 when used at a reduced initial velocity of 1200 f.s.:

(a) A weaker hammerspring has been provided and the setback pin eliminated to insure that the fuze will arm consistently at the considerably decreased setback produced by the 5"/38 caliber gun fired at 1200 f.s. I.V.

(b) Heavier centrifugal driving weights have been added to provide greater driving torque for the clockwork mechanism.

(c) Stronger kickoff springs with additional coils have been added to provide greater assistance to the centrifugal weights. These springs provide driving torque over the entire 45-second range of the fuze. The weaker kickoff springs used in the 45-second Fuzes Mk 18 and Mk 50 provide assisting torque for approximately 20 seconds.

(d) Directly below the shoulder of the firing pin a firing pin safety block has been added, arranged to rotate outwardly by centrifugal force against spring pressure.

(e) The 30-tooth escapement wheel used in the Fuzes Mk 18, Mk 50, and Mk 61 Mod 0 has been replaced by a 20-tooth wheel for the Fuze Mk 61 Mod 1, permitting manufacture of larger and more correctly formed teeth which makes for a better escapement. To compensate for the fewer escapement wheel teeth, the rate of oscillation of the escapement lever has been slowed down by the addition of small weights. Production of the Fuze Mk 61 Mod 1 was started with Lot No. 110. Fuzes produced in Lot Nos. 1 to 109, inclusive, contained the 30-tooth escapement wheel.

(f) A spring has been added to the firing arm to assist centrifugal force in the operation of this part.

(g) The centrifugal escapement release safety feature has been modified to cause it to operate more effectively under the low spin rate.

The nose of the Fuze Mk 61 has been painted white in order to distinguish these fuzes from the Fuzes Mk 18 and Mk 50 which in all other respects, except for marking, have the same external appearance. The Fuze Mk 61 is set in the same manner and is designed to function with approximately the same accuracy of timing as the Fuzes Mk 18 and Mk 50, namely, within $\pm$ (.08 + .005T) seconds of the actual setting, where T is this setting. Early acceptance test timing data indicate the Fuze Mk 61 to possess an accuracy equal to that of the Fuzes Mk 18 and Mk 50.

For the present, 5"/38 A.A.C. and W.P. projectiles are not being issued assembled with the Mechanical Time Fuze Mk 61, but are being issued assembled with Mechanical Time Fuzes Mk 18 or Mk 50. However, one Mechanical Time Fuze Mk 61 is being issued with each 5"/38 1200 f.s. cartridge.

Since the supply has been critical, initial distribution of the Mechanical Time Fuze Mk 61 has been made under the guidance of the Chief of Naval Operations. Requests through established logistic channels should accordingly indicate the following information:

(a) Estimated quantity required for immediate important operational purposes.

(b) Estimated quantity anticipated for expenditure or installation per month.

(c) Stock level considered desirable to cover contingencies.

Mechanical Time Fuze Mark 62

A new Mechanical Time Fuze, designated Mk 62, is now being manufactured for use in 12", 14", and 16" H.C. projectiles as a replacement for the Mechanical Time Fuze Mk 42 and Mods, which is hereby declared unserviceable and obsolete.

Very poor performance of the Fuze Mk 42, particularly when used with high capacity (low velocity) powder charges, necessitated the development of the Fuze Mk 62. Ballistic tests and experimental data indicate that the Fuze Mk 42 will result in duds approximately 40 percent of the time when fired in 16" H.C. projectiles with H.C. charges and approximately 15 percent of the time when fired in 14" H.C. projectiles with the corresponding powder charges. NAVORD OCL A60-44 describes the Mechanical Time Fuze Mk 42.

Successful operation of the Mechanical Time Fuze Mk 61 in 5"/38 caliber projectiles fired at 1200 f.s. I.V. indicated that this fuze with slight modification could be made to function reliably in major caliber projectiles. The Fuze Mk 62 was therefore developed as a modification to the basic design of the Fuzes Mk 18 and Mk 50, as was the Fuze Mk 61. The Mk 62 differs from the Fuzes Mk 18 and Mk 50 as follows:

(a) The hammerspring and lug on the timing disc have been weakened and the setback pin eliminated to enable the fuze to arm under the low setback produced in major caliber guns firing high capacity charges. The hammerspring in the Fuze Mk 62 is weaker than that in the Fuze Mk 61.

(b) Since the hammerspring has been weakened to such an extent that partial arming may result if the fuze is accidently dropped, a post has been installed under the hammerspring in the safe position as an added safety feature. This safety feature for handling and shipment, however, is effective only when the fuze is set on "safe." Therefore, it is especially important that this fuze be set on "safe" at all times, except immediately prior to setting for time and firing.

(c) Heavier centrifugal driving weights have been added to provide greater driving torque for the clockwork mechanism.

(d) Stronger kickoff springs with additional coils have been added to provide greater assistance to the centrifugal weights. These springs provide driving torque over the entire 45-second range of the fuze. The weaker kickoff springs used in the 45-second Fuze Mk 18 and Mk 50 provide assisting torque for approximately 20 seconds.

(e) Directly below the shoulder of the firing pin a firing pin safety block has been added, arranged to rotate outwardly by centrifugal force against spring pressure.

(f) The 30-tooth escapement wheel used in the Fuze Mk 18 and Mk 50 has been replaced by a 20-tooth wheel for the Fuze Mk 62, permitting manufacture of larger and more correctly formed teeth, which makes for a better escapement. To compensate for the fewer escapement wheel teeth, the rate of oscillation of the escapement lever has been slowed down by the addition of small weights.

(g) A spring has been added to the firing arm to assist centrifugal force in the operation of this part.

(h) The centrifugal escapement release feature has been modified to cause it to operate more effectively under the low spin rate.

The Mechanical Time Fuze Mk 62 has the same external shape and appearance as the Mechanical Time Fuze Mks 18 and 50 and is set in the same manner. It is designed to function with approximately the same accuracy as the Fuze Mks 18 and 50, namely, within $\pm$ (.08 + .005T) seconds of the actual setting, where T is this setting.

Since the supply is critical, initial distribution of Mechanical Time Fuze Mk 62 will be made under the guidance of the Chief of Naval Operations. Requests through established logistic channels should accordingly indicate the following information:

(a) Estimated quantity required for immediate important operational purposes.

(b) Estimated quantity anticipated for expenditure or installation per month.

(c) Stock level considered desirable to cover contingencies.